WTS1 Series II Belt Scale

Operation and Installation Manual

Web Tech Australia Pty Ltd
PO Box 4006
11 Electronics St
Eight Mile Plains, QLD, 4113
Ph: 1800 777 906
Fax: 61 7 3841 0005
E-mail: info@web-tech.com.au

WTS1S2 – OPERATION AND INSTALLATION MANUAL

Contents

Introduction 1
Web-Tech Belt Scale Range 2
Theory of Operation 3
Theory of Operation – Weighframe 4
Pivoted Type Belt Scales 4
Fully Floating Weighframe 4
Theory of Operation – Speed Sensor 5
Belt Speed Sensor 5
Belt Travel Sensor 5
Theory of Operation – Integrator 6
Integrator Location 6
Theory of Operation – Calibration 7
Material Test 7
Calibration Chain / Train Test 7
Static Weight Test 7
Electronic Simulation Test 7
Theory of Operation – Conveyor Design 8
Weighframe Location 8
Conveyor Inclination 8
Concave and Convex Curves 8
Conveyor Take-up 8
Belt Loading 8
Belt Type 8
Belt Tracking 8
Conveyor Idlers 8
Theory of Operation – Conveyor Design 9
Idler Alignment 9
Conveyor Stringers 9
Environmental Protection 9
Theory of Operation – Calibration 10
Theory of Operation – Maintenance 11
Mechanical Installation 12
Weighframe Location 12
Lifting of Belt 12
Weighframe Installation 12
Mechanical Installation 13

Contents

Electrical Installation – Encoder Speed Sensor 18
Description 18
Mechanical installation 18
Electrical Installation 18
Part Number 18
Electrical Installation – Magnetic Pickup Speed Sensor 19
Description 19
Mechanical installation 19
Electrical Installation 19
Part Number 19
Electrical Installation – Proximity Switch 20
Description 20
Mechanical installation 20
Electrical Installation 20
Part Number 20
Electrical Installation – Integrator Masterweigh 6 21
Belt Scale Electronics 21
Enclosure Mounting 21
Cables 21
Cable Terminations 21
Start Up 21
Start Up Steps 21
Masterweigh 6 – Installation and Operation Manual 22
Appendix A – WTS1S2 General Arrangements ..... A
Appendix B – Wiring Diagrams ..... B
Appendix C – Electrical Enclosure GAs C
Appendix D – Belt Scale Positioning Guide ..... D
Appendix E – MW6 Datasheets ..... E

WTS1S2 – INSTALLATION AND OPERATION MANUAL

Introduction

The model "WTS1S2" belt scale is one of Web Tech AutoWeigh's "process" type conveyor belt scales, and is suitable for applications most applications. Accuracies in the order of ±1% are achievable. The WTS1S2 conveyor belt scale is a heavy-duty one idler fully suspended weighframe particularly suitable for the mining industry. Incorporating four load cells, it is available to suit belt widths from 450mm to 2400mm. The weighframe can be supplied in either mild steel galvanised, or stainless steel construction. Standard idler spacing's of 1000mm, 1200mm and 1500 mm are available.

WTS1S2 In-situ in Conveyor
1000mm Idler Spacing, 1000mm Belt Width

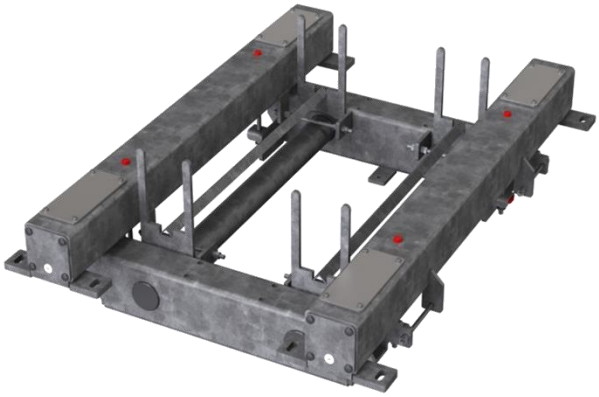

WTS1S2 Cal Bar

WTS1S2 In-Situ

Model	Description	Typical Applications	Accuracy
E40	Universal type scale, simplest installation, dual load cell.	Aggregate plants, Feeder control	±, 1 – 5 %
WTE11	Single idler, single load cell process scale with mechanical tare, belt widths up to 1050 mm.	Aggregate plants, Timber plants, Gold ore plants	±, 1 – 3 %
WTE12	Single idler, dual load cell process scale with mechanical tare, suitable for belt widths up to 1600 mm.	Aggregate plants, Timber plants, Gold ore plants	±, 1 – 3 %
WTE21	Dual idler, single load cell process scale with mechanical tare, belt widths up to 1050 mm.	Aggregate plants, Timber plants, Gold ore plants	±, 0.5 – 1 %
WTE22	Dual idler, dual load cell process scale with mechanical tare, suitable for belt widths up to 1600 mm.	Aggregate plants, Timber plants, Gold ore plants	±, 0.5 – 1 %
WTS1	Single idler, dual load cell heavy duty suspended weighframe, suitable for belt widths from 450 to 2400 mm.	All mining applications	±, 1 %
WTS2	Dual idler, dual load cell heavy duty suspended weighframe, suitable for belt widths from 450 to 2400 mm.	All mining applications	±, 0.5 %
WTS4	Four idler, four load cell, fully suspended weighframe, suitable for belt widths up to 2400 mm.	High accuracy loadouts, Material transfers	±, 0.25 – 0.5 %
WTS6	Six idler, four load cell, heavy duty suspended weighframe, suitable for belt widths up to 2400 mm, high belt tension areas.	High accuracy product transfers such as shiploaders	±, 0.1 – 0.25 %
WTS8	Eight idler, four load cell, heavy duty suspended weighframe, suitable for belt widths up to 2400 mm, high belt tension areas.	High accuracy product transfers such as shiploaders	±, 0.1 – 0.25 %

Theory of Operation

Belt scales enable material to be weighed on a conveyor whilst in motion. A belt scale differs from a static weighing system, such as a bin weighing system, in that the belt scale is required to measure two variables. The first variable is the weight on the conveyor belt, and the second variable is the belt speed or belt travel. The weight of material on the conveyor belt is obtained by measuring the load on one or more idlers. This load can then be expressed in terms of kg/metre of belt. The belt speed or belt travel is measured by using a device which gives an output proportional to the belt speed or belt travel. The flow "rate" of material passing over the belt scale can be expressed as:

Flow Rate = Weight (Weighframe) × Speed (Belt Speed Sensor)

Total Weight = Weight (Weighframe) × Belt Travel (Belt Speed Sensor)

Belt scale manufacturers use either the belt speed (flow rate) or belt travel (total weight) methods depending on their design philosophy. Those that use the belt speed (flow rate) method use a high frequency speed sensor (up to 1 kHz), the output of which is proportional to the belt speed. The integrator primarily calculates the "rate" passing over the belt scale, from which the "total" is then derived. Those that use the belt travel (total weight) method generally use a low frequency speed sensor, which delivers a number of pulses per unit of belt length. The integration primarily calculates the "total" weight, from which the flow "rate" is then derived. Due to the availability of high-speed processors, most modern belt scales use the "rate" method as the basis for their electronic design. Whilst the mathematics used by the belt scale electronics may appear to be relatively simple, the tasks required of the electronics are more complex. Not only must the electronics be capable of receiving and processing the signals from the weighing mechanism and belt speed / travel device, it must also be capable of the following:

- Display Rate and Total readings
- Provide stable power supplies to the weighing and belt speed / travel elements
- Provide analogue and digital outputs for remote equipment
- Provide Automatic Zero and Span calibration facilities
- Provide serial communications for remote computers
- Carry out "Auto Zero" routines when the belt is empty
- Provide alarm functions
- Provide control functions
- Interface with the operator

The measurement of the weight on the conveyor belt and the belt speed / travel also present some physical problems which must be overcome. The accuracy of the weight measurement is dependent on a number of factors such as belt tension, belt construction, weighframe location, troughing angle and material loading. The degree of accuracy and ways of improving the accuracy are discussed in further detail in the following sections.

Theory of Operation – Weighframe

Belt Scales consist of four main components these being:

1. Weighframe and associated weigh idlers
2. Belt speed / travel sensor
3. Electronic Integrator
4. Calibration device

The function of the weighframe is to support the weigh idler(s) and conveyor belt, and to convert the weight of the material within the weigh area to an electrical signal, which can be processed by the electronics. Weighframes are varied in design, however the majority of the designs incorporate one or more transducers, most typically strain gauge load cells .The weighframe is usually self-contained, low profile, and designed to be installed within the limits of the conveyor structure. The number of idlers used is dependent upon the accuracy required, and the conveyor parameters. Various weighframe designs exist, each with their own perceived advantages. Most belt scale manufacturers use either a "pivoted" design or a "fully floating" design. With a pivoted design, one or more idlers are mounted on a frame, which is pivoted at one end by some form of fulcrum point. The fulcrum point is designed to as frictionless as possible and to require as little maintenance as possible. Early pivot designs included knife edges and bearings or ball bearings, however due to the perceived maintenance problems, and the advent of transducers with very small amounts of movement, these were replaced with components such as torque tubes, flexures or rubber trunnions. The "fully floating" design comprises one or more idlers mounted on frame, which is in turn supported at each corner by a transducer. Horizontal and transverse restrainers limit the movement of the weighframe in any direction, except that perpendicular to the belt line. The advantages of both types of design are as follows:

Pivoted Type Belt Scales

- Requires less transducers
- Better sensitivity from the transducers. As the pivoted design can be counterweighted allowing the “deadweight” of the belt and idles to be removed.
- Less calibration weights required

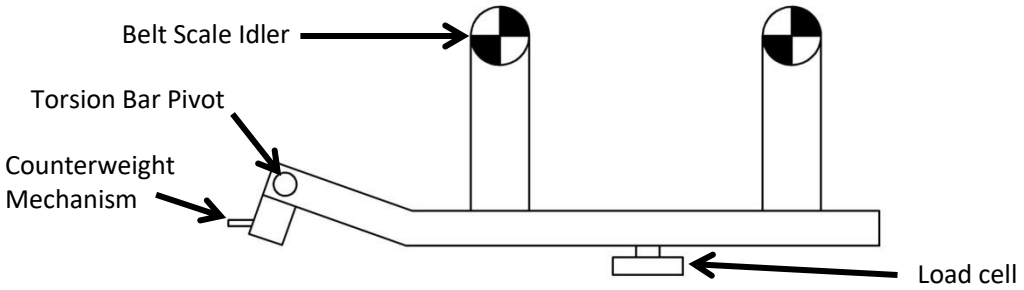

Fully Floating Weighframe

- Same design as used in high accuracy static weighing systems
- Do not use pivots, which could influence measurements
- Forces acting on weigh idlers act directly on transducers
- Calibration weights represent the same weight regardless of where they are placed on weighframe

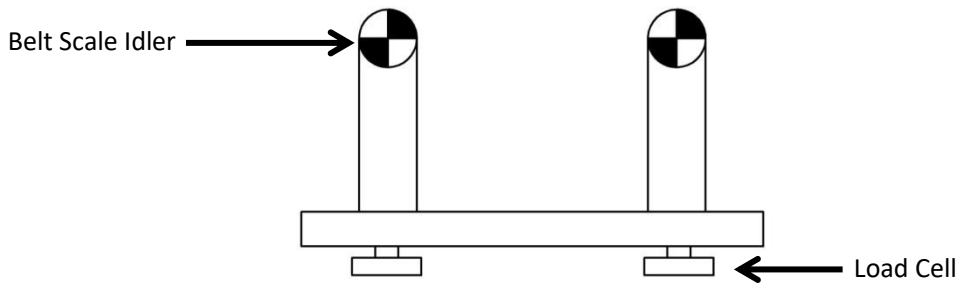

Theory of Operation – Speed Sensor

As previously discussed, a sensor is supplied to provide a signal to the electronic integrator as to the actual belt speed or belt travel.

Belt Speed Sensor

Belt speed sensors can be supplied in several arrangements. The most common method is for a "rotary" type sensor to be mounted in an enclosure and then to be connected to a "live" shaft pulley, usually the tail pulley. As the pulley rotates, the speed sensor shaft is also rotated, which in turn produces a pulse output. The frequency of the pulse output is proportional to the rotational speed of the pulley. Typical frequencies fall within the range of 100 - 1000 Hz. Belt speed sensors should not be connected to the drive pulley, as any slippage between the drive pulley and conveyor belt will not be measured. A second type of belt speed sensor involves mounting a sprocket at the end of a conveyor roll, and sensing its rotational speed with the use of a "Magnetic Pick-up". The magnetic pick-up counts the number of sprocket teeth that pass by a sensing element, and therefore produces a frequency proportional to the speed. This system is not normally used on applications where the conveyor rolls are subject to material build-up, as this will change the diameter of the roll and therefore the indicated belt speed. However on some applications where the idler rolls appear to be carrying build-up, closer inspection will show that the area of idler roll in contact with the belt remains clean. The advantages of using the idler roll / sprocket type of sensor is that they are relatively simple and robust, and can be situated close to the weighframe. When installed close to the weighframe, the belt speed being measured is the actual belt speed at the weighframe.

A third type of system still popular with some manufacturers / customers is the use of a pivoted "trailing" arm with a wheel in contact with the return belt. The wheel is attached to a rotary sensor similar to that used with the tail pulley method. The disadvantages of this method are:

The wheel is prone to bounce when a disturbance in the belt surface such as a splice passes under it. This will cause a variation in frequency output, and therefore the measured belt speed.

The wheel is usually mounted on the return belt adjacent to the weighframe. This can be a long distance away from the weighframe (by belt travel), and therefore the belt speed measured may not be the same belt speed at the weighframe.

Belt Travel Sensor

A belt travel sensor usually consists of one or more "flags" welded to a pulley, usually the tail pulley, and a proximity probe. As the flags pass by the proximity probe they are counted, and this relates to the amount of conveyor belt that has passed around the pulley. The advantage of this type of system is that it is relatively simple and robust. However the disadvantage is that it is low frequency in output, and therefore the resolution can be coarse.

PXT Speed Sensor

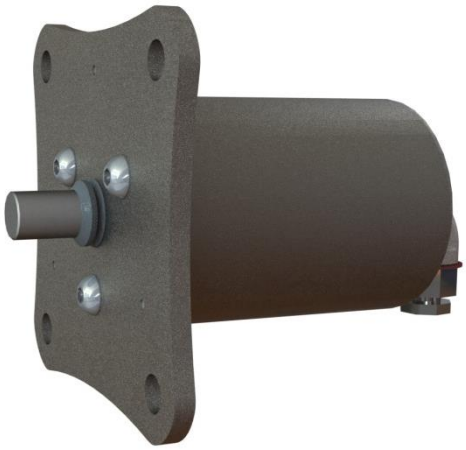

WXT Speed Sensor

Theory of Operation – Integrator

The electronic integrator is designed to carry out the following basic functions:

- Provide supply voltages to weighframe transducers and belt speed / travel sensors
- Measure and integrate the instantaneous weight on weighframe and instantaneous belt speed / travel which calculates the mass rate and mass total passing over the conveyor respectively
- Provide analogue and digital outputs for remote equipment
- Provide facilities for calibration

The electronic integrator may also provide the following options:

- Provide P.I.D. control output
- Provide serial communications for remote computers
- Provide rate alarm outputs
- Provide batching facilities

Most modern integrators are microprocessor based with computing power similar to a personal computer. Each manufacturer engineers their own software, which incorporates their own design philosophies. Whilst all integrators may look similar at first glance, the methods used by the various manufacturers to achieve the end-result, can vary significantly. The current "state of the art" integrators are designed to make operation / calibration easier for site personnel, and great emphasis should be placed on the ease of use. Many sites will prefer the belt scale supplier to carry out routine maintenance and calibration, however in an emergency situation, there is nothing worse than having to wade through a manual, attempting to understand what a displayed code means.

Integrator Location

The electronic integrator does not have to be located adjacent to the weighframe. Some customers may wish to mount the integrator in a nearby motor control centre or in a control room. Whilst this is possible the following points should be considered when selecting the location:

- The weighframe transducers produce very low voltage levels and therefore if long cables are used voltage drops may occur
- The longer the cable run, the greater the chance of picking up electrical noise on the cables
- Long distances between weighframe and integrator increases the time required when carrying out calibrations
- Is the proposed area classified as Dust Ignition Proof or Hazardous?

It is Web-Tech's belief that the best location for the integrator is adjacent to the weighframe where possible. The output signals can be used to provide information to remote equipment. The integrator should be mounted so that it is free from vibration, not subject to direct sunlight and rain. If installed outdoors it is suggested that rain / sun hoods are used. When selecting a belt scale system, the following integrator features should be investigated:

- Are the operation /calibration functions displayed / entered in plain English or in code form?
- Is the circuit design truly digital or does it require potentiometer adjustments in its setup?
- Are service and fault finding functions available?
- Does the integrator maintain its accuracy over a wide temperature range, typically 0 to 40oC
- Are the analogue and pulse outputs "isolated"?
- Is the integrator enclosure suitable for the environment?
- Does the system provide automatic zero and calibration facilities?
- Are the integrator outputs compatible with remote equipment?
- Is the integrator supplied with filters on the mains input?
- Can the integrator be easily serviced?

There are basically four methods that can be used to calibrate a belt scale system:

- Material Test
- Calibration Chain / Train
- Static Calibration Weights
- Electronic Simulation

Material Test

A material test is the best form of test that can be done. The test involves collecting an amount of material that has passed over the belt scale, and weighing it on an accurate static weighing system such as a weighbridge or bin weighing system. Other methods of testing simulate material loading, however only a material test duplicates the actual operating conditions of the conveyor. With regard to the amount of material required for a test, a general rule of thumb is a test of 10 minutes duration. When considering the installation of a belt scale system, a method of diverting material from the process should be investigated. It is essential when carrying out a material test that it can be guaranteed that all of the material that has passed over the belt scale has been collected.

Calibration Chain / Train Test

A calibration chain / train is a device that sits on the conveyor belt above the weighframe approach and retreat idlers. It is restrained in position whilst the conveyor is run, and simulates material loading. A calibration chain consists of a series of interconnected steel rolls, which is manufactured to represent approximately 80 % of the maximum belt loading. A calibration train is similar to a chain, except that it consists of a series of interconnected carriages, which can be loaded with weights to simulate various belt loadings. The disadvantages of calibration chains / trains are as follows:

- They are generally expensive, sometimes more expensive than the belt scale they are testing
- They require additional personnel to set up
- They have to be stored above the conveyor and therefore a storage structure has to be built
- They require maintenance

Static Weight Test

Static weight tests are the most common form of testing carried out on Belt Scales. All belt scale manufacturers offer calibration weights as an option with the system, the weight and quantity sized to approximate 75 - 80 % of maximum belt loading. The calibration weights are applied directly to the weighframe, the belt is run, and material loading is simulated. This is the method Web-Tech generally uses to calibrate our belt scales. The advantages of this method are as follows:

- Can be applied by one person, and for high belt loadings, permanent weights that can be jacked on / off the weighframe can be installed
- If a material test can be initially carried out, they can be referenced to the material test results
- Repeatability tests are easy to carry out
- This is generally the cheapest method

The disadvantages of static calibration weights are as follows:

- They cannot exactly duplicate the running conditions of the conveyor
- They sit directly on the weighframe, and therefore do not duplicate the belt effects
- They tend to be lost

Electronic Simulation Test

Electronic Simulation tests are carried out without the use of weights, material or chains. When the test is initiated, a "shunt" resistor is applied across the transducer input, which creates an offset. The value of the resistor is usually calculated to represent approximately 75 - 80 % of maximum belt loading. A test value is initially established at the time of commissioning, which can then be used to check the repeatability of the system. This method of testing does not obviously take into account the belt effects or conveyor running conditions. Web-Tech provides this method of testing as a standard feature, however we do not place great emphasis on its use.

Theory of Operation – Conveyor Design

Conveyors are designed to transport material from one location to another, and not specifically for the benefit of a belt scale. A belt scale is often an afterthought, and therefore the conveyor design may be less than ideal for accurate and repeatable results. The following is a summary of recommended conveyor design.

Weighframe Location
The weighframe should be located in a position where the belt tension and belt tension variations are minimal. Generally speaking this location is at the tail end of the conveyor at the loading point. However sufficient distance from the loading point should be provided to allow the material to be settled, and be travelling at the same velocity as the belt. Typically for most products, this is approximately 6 idler widths or from 6-9 metres.

Conveyor Inclination
Ideally the conveyor would be horizontal to provide for more consistent belt tensions, however this is not generally practical. The conveyor inclination angle should not be so great as to allow the product to roll back. This will cause a positive error (some material will be weighed twice) from the belt scale.

Concave and Convex Curves
Concave curves should be avoided where possible. The weighframe should be located as far away as possible from the tangent point of the curve, and no closer than 20 metres. Convex curves are less of a problem, however the weighframe should be located no closer than 6 metres from the tangent point of the curve.

Conveyor Take-up
The conveyor should preferably be fitted with gravity take-up on the return belt. Gravity take-ups located on the tail pulley are acceptable, however less desirable. Screw take-ups on short conveyors (less than 15 metres) may be acceptable, however not preferred.

Belt Loading
Belt loading should be uniform and consistent. Belts should be sized so that they are volumetrically 75 - 80 % full.

Belt Type
The selected belt type should use the minimum number of plies possible. Additional plies add to the stiffness of the belt and therefore reduce the achievable accuracy. Steel cored belts are the least desirable due to the stiffness of these belts. Conveyor belts should be uniform in weight, with a minimum of splices. Metal clip fasteners should not be used.

Belt Tracking
Belt tracking should be central to the idlers regardless of belt loading. Training idlers should not be used any closer than 5 idler spacings from the weighframe.

Conveyor Idlers
It is more desirable to use idlers with shallow troughing angles. Idlers with 20o angle are better than 30o angle, and 30o is better than 35o. Idlers with 45o troughing angle can be used, however errors due to belt tension changes are more significant. The steepness of the troughing angle determines the planar moment of inertia of the belt, which determines how susceptible the Belt Scale is to belt tension variations and misalignment. Idlers on the weighframe, two approach and two retreat idlers should be:

- In-Line "Weigh Quality"
- Rolls should be machined concentric to provide 0.13 mm Total Indicated Runout
- Rolls to be balanced within 0.011 Nm
- Rolls to be fitted with some form of height adjustment

On some low accuracy applications, some of the above requirements may not be required.

Idler Alignment
The mechanical alignment of the weigh approach and retreat idlers is critical. The height misalignment in this area should be no greater than ± 0.4 mm. Mechanical misalignment of these idlers will cause the accuracy of the system to vary depending on belt tension variations. It is advisable to have the belt scale supplier assist in the mechanical installation.

Conveyor Stringers
The conveyor stringers should be rigid, free from vibration and capable of supporting the load without deflection. The weighframe's and approach / retreat idlers should not be installed where joins in the stringers exist if this is not possible, stringers should be welded together using "fish" plates. The stringers should be suitably supported in the area of the weighframe / approach / retreat idlers so that the total deflection within the weigh area does not exceed 0.25 mm.

Environmental Protection
Where the conveyor is exposed to the elements, errors may be induced by external influences such as wind. Errors equivalent to 30 tonnes per hour have been measured on large conveyors subject to high wind velocities. These errors can be minimised by installing guards, which protect the weighframe and 5 metres of conveyor in each direction. Where possible, supply the belt scale manufacturer with a detailed arrangement drawing of the proposed installation with as many parameters as known.

WTS1S2 Belt Scale in Operation

Theory of Operation – Calibration

Most belt scale manufacturers can supply a number of different model weighframes and electronic integrators. Some models may appear to duplicate each other in regard to accuracy specifications and general features. For example, two different model weighframes may be specified at an accuracy of ± 0.5 %. However one model may be designed for medium duties with relatively light belt loadings and the other for heavy-duty applications with high belt loadings. When you examine the construction of the weighframe, will it stand up to the duty?

The accuracy of the system will be determined by the weighframe type, as the same model electronics will normally be used regardless of the accuracy requirements. More than one model electronics may be available, however this is generally because they offer various options. When specifying a desired accuracy for the belt scale system, the application should be investigated thoroughly. Like most equipment, the higher the accuracy specified the more expensive the system will be.
Belt scale accuracy depends on a number of factors such as belt tension, belt type, location and belt loadings. However they are usually categorised into one of three groups.

SINGLE IDLER Used for general purpose process scales, with typical accuracies in the order of 1% to 3%.

DUAL IDLER Used for inventory purpose scales with typical accuracies of 0.5%.

MULTI IDLER Used for high precision systems such as ship loaders and scales for payment purposes. Accuracies typically 0.25% or lower.

However in some applications it may be necessary to use a four idler weighframe to achieve 1% accuracy. On other applications, a single idler weighframe may achieve 0.5% accuracies. The belt scale supplier will require certain information regarding the application, which should be detailed on their "Application Data" sheets. It may be preferable to allow the supplier to review the data and advise what options are available in regard to the possible accuracy versus the costs, rather than specifying the accuracy.

WTS4S2 in Operation
4 Idler Precision Belt Scale

Many belt scale installations are ignored until a problem exists. Like all equipment a minimum of maintenance will assist in providing long-term reliability. For multiple installations at the one site it may be worth contracting the Belt Scale supplier to carry out the maintenance and regular calibrations. These visits can also be used to provide basic training for the site personnel in the event of an emergency breakdown situation. These site visits are normally scheduled at three monthly intervals.

The following work should be carried out on a regular basis:

- Clean down of build-up on weighframe and removal of spillage
- Inspection and cleaning of idler rolls
- Zero calibrations
- Inspect belt tracking
- Inspect belt wear

The following work can be carried out less frequently:

- Span calibrations
- Check mechanical alignment
- Balance transducers (where necessary)
- Check cabling and junction boxes

Apart from the general housekeeping of the installation, the other important aspect that should be addressed is the record keeping for each installation. Most modern belt scale electronics store all data in battery backed or non-volatile memory, however in the case of catastrophic failure this data will probably be lost or not accessible. At these times it is essential that accurate records be available for reprogramming purposes. Accurate records also allow review of the belt scale performance and possible problems that may require attention.

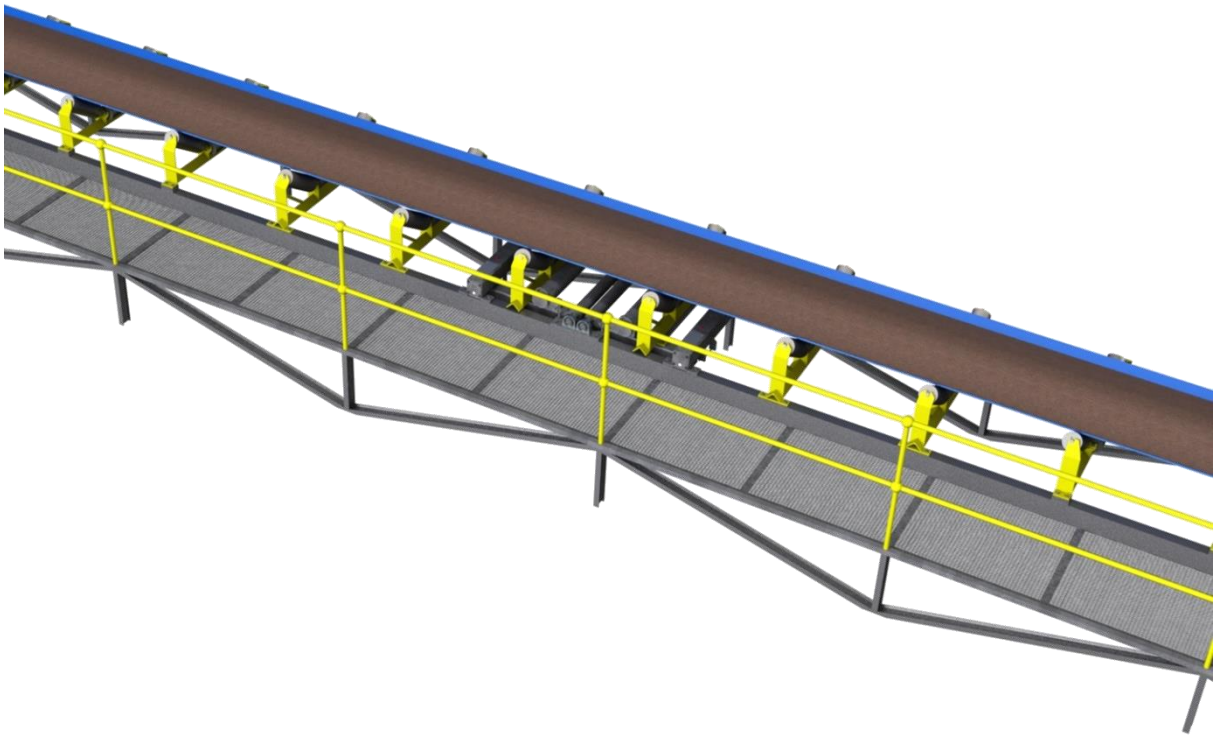

Mechanical Installation

The mechanical installation of a WTS1 Series II belt scale comprises the following work:

- Lifting of conveyor belt in proposed weighframe location
- Installation of weighframe and support beams
- Installation of weigh idlers on weighframe
- Installation of approach and retreat idlers
- Aligning the height of the weigh, approach and retreat idlers

Refer to drawings:

Calibration Bars	**WTS1S200 & WTS1S210**
In situ Calibration Weight	**WTS1S211 & WTS1S212**
In situ Calibration Weight Billet	**WTS1S213 & WTS1S214**

Weighframe Location

The weighframe location may have been previously nominated after discussions with Web-Tech. If not refer to the "Belt Scale Selection and Installation Guide" section of this manual for guidance, or contact Web-Tech to confirm the position.

BEFORE CARRYING OUT ANY WORK ON THE CONVEYOR, ISOLATE THE CONVEYOR DRIVE AS REQUIRED.

Lifting of Belt

The conveyor belt (if fitted) will be required to be lifted off the idlers in the area of the installation. The belt should be lifted so that access is available for approximately 5 metres either side of the weighframe centre. The belt should be lifted approximately 600 mm above the idlers, and the belt should be lifted by means of placing pipe or timber under the belt, which will keep the belt flat. If the conveyor is fitted with a gravity take-up, it will be necessary to lift the take-up weight first. Ensure that the belt is supported securely before commencing any work.

Weighframe Installation

The weighframe is robust in design, however care should be exercised when lifting and installing it into position. **The weighframe should be lifted with web slings, do not use chains.**

1) If standard idlers already exist, remove 5 sets from the conveyor.

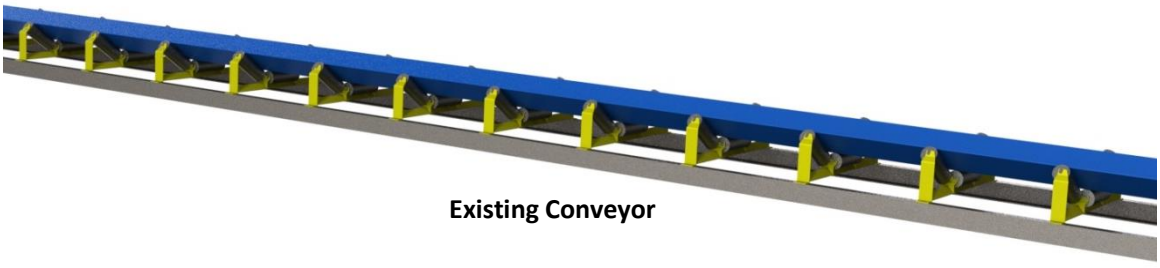

Existing Conveyor

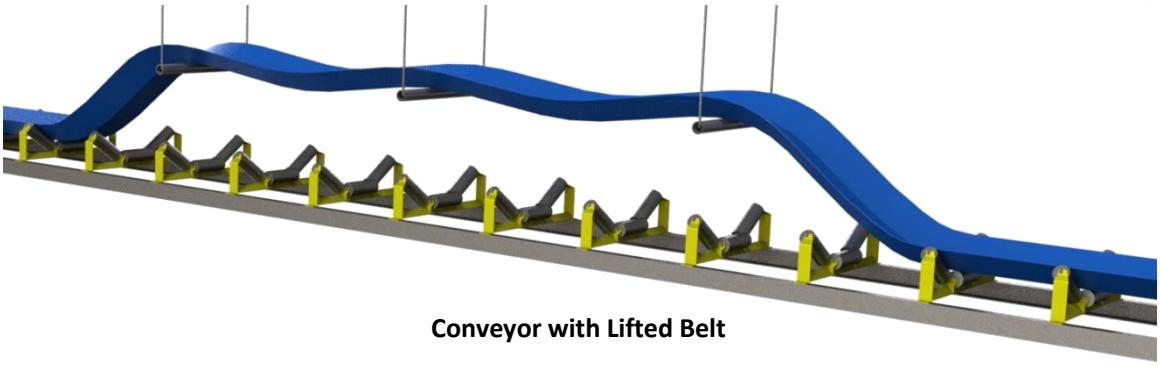

Conveyor with Lifted Belt

2) Mark out the centre of the space created, and this will be the centre of the weighframe.

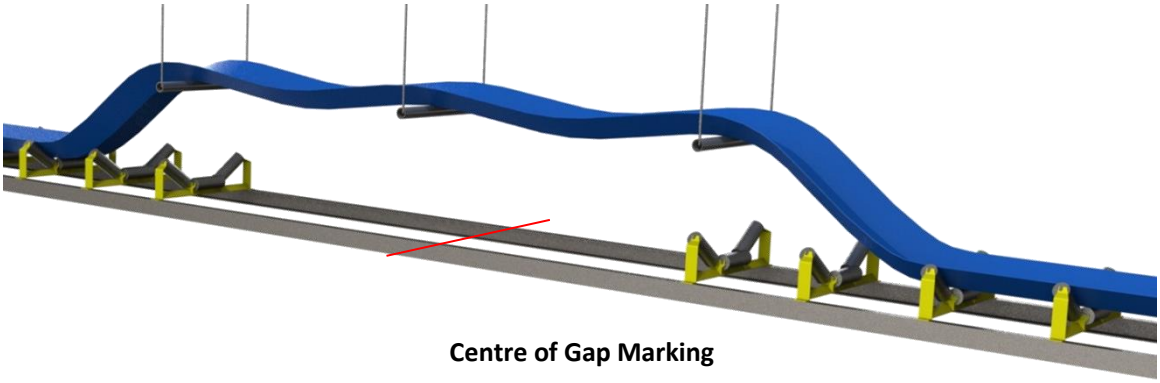

Centre of Gap Marking

3) Remove the weighframe from the packing crate.
4) Lift the weighframe into the conveyor so that the weighframe mounting feet are sitting on the stringers. Position the weighframe so that the centre of the weighframe is in line with the previously marked out centre of the space.

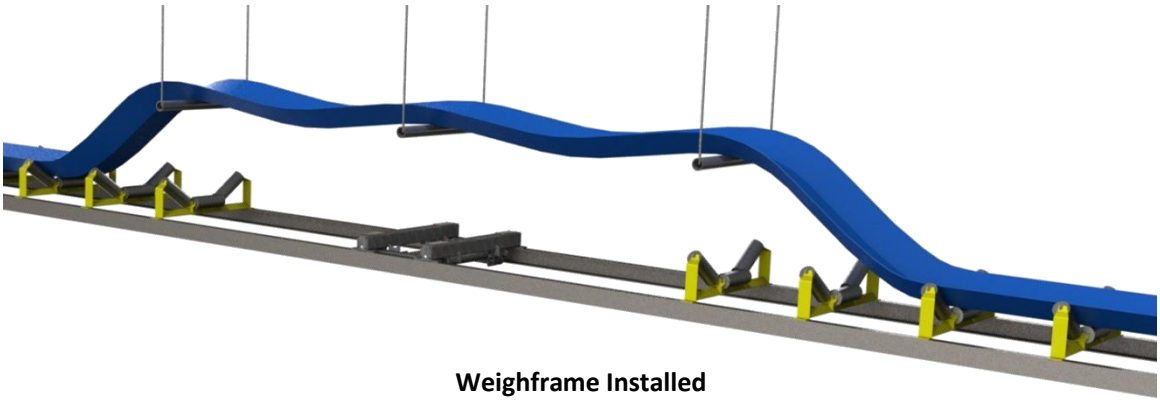

Weighframe Installed

5) Measure and mark the centre of the centre (horizontal) roll on the first of the existing idlers in each direction. Tie a stringline between these centre points.

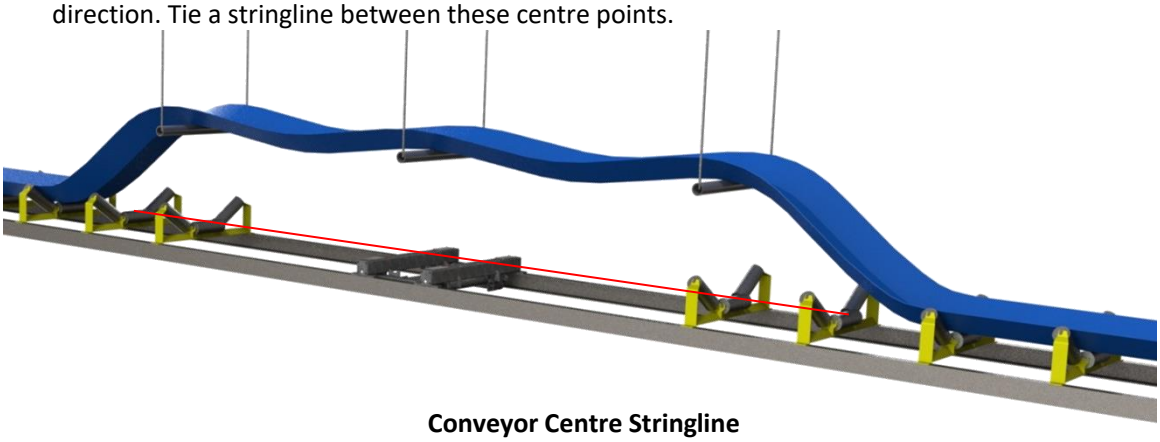

Conveyor Centre Stringline

6) Measure and mark the centre of the weighframe crossbeams. Square the weighframe up so that the centre of the crossbeams are in line with the stringline.
7) Mark out the position of the weighframe mounting holes on the conveyor stringers. Drill 18 mm holes, for M16 bolts. Install bolts, washers and nuts and tighten down. Ensure that spring washers are used.

8) **If the belt scale being installed uses calibration bars ignore this step.**
Web-Tech supplies a custom set of calibration weights for each belt scale. Install the calibration weight bearings as specified by Web-Tech. The actual weights will be installed later. It is important to bearings are aligned so that they enable to the calibration weights to make clean contact with the "V" blocks welded to the weighframe.

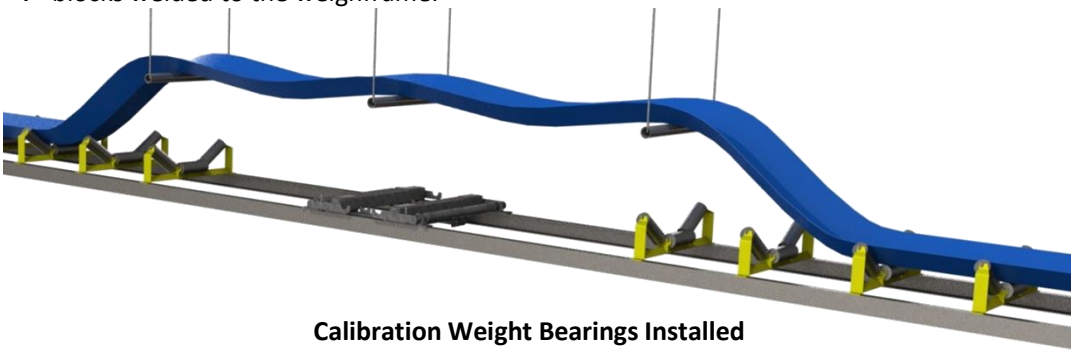

Calibration Weight Bearings Installed

9) Locate one of the In-Line Weigh Quality idlers. Sit the idler frames across the weighframe on the idler mounting plates. Install centre rolls into the idler frames (wing rolls not required at this stage). Ensure that grub screws in roll shafts are not protruding from the bottom of the shaft. Measure and mark the centre of the centre roll face.

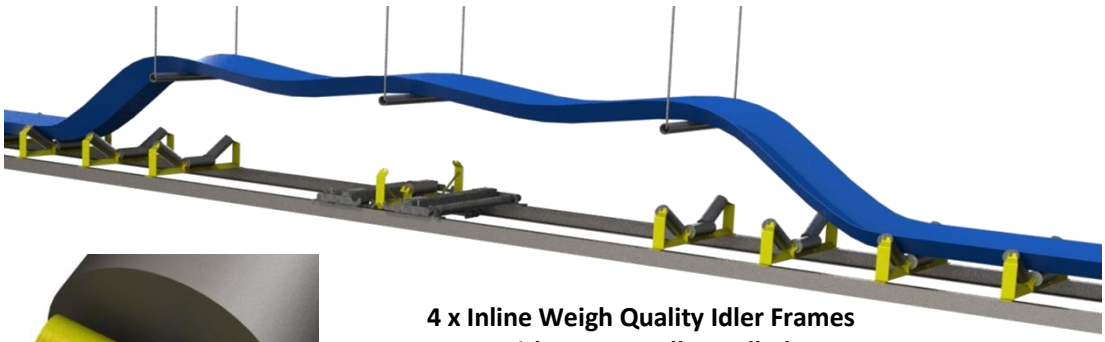

4 x Inline Weigh Quality Idler Frames
With Centre Roll Installed

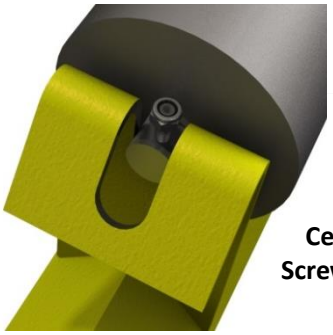

Centre Roll Grub
Screw and Nyloc Nut

10) Position the idlers so that they are:
- In line with the stringline
- Are dimensionally laid out as shown on the installation drawing. When the idlers are positioned correctly, the idler base is to be welded to the mounting plates on the weighframe.

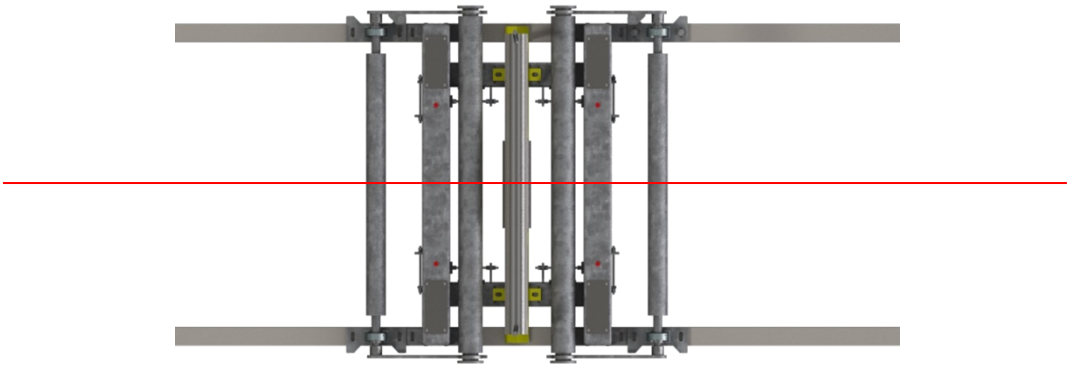

NOTE: THE LOADCELLS ARE PREINSTALLED IN THE WEIGHFRAME AND COULD BE DAMAGED BY IMPROPER WELDING PRACTICES. ENSURE THAT WELDING EARTH STRAP IS CONNECTED AT THE POINT OF WELDING.

11) **If the belt scale being installed uses calibration bars ignore this step.**
Now that the idler frames have been welded into position the calibration weights can be installed. The bar type of calibration weights do not need to be installed at this time.

Calibration Weights Installed onto the Calibration Weight Bearings

12) Locate the remaining in-line weigh quality idlers, and sit frames across the conveyor stringers, with two sets upstream and two sets downstream of the weighframe. Install centre rolls in these frames. Measure and mark the centre of the centre roll face on these idlers.

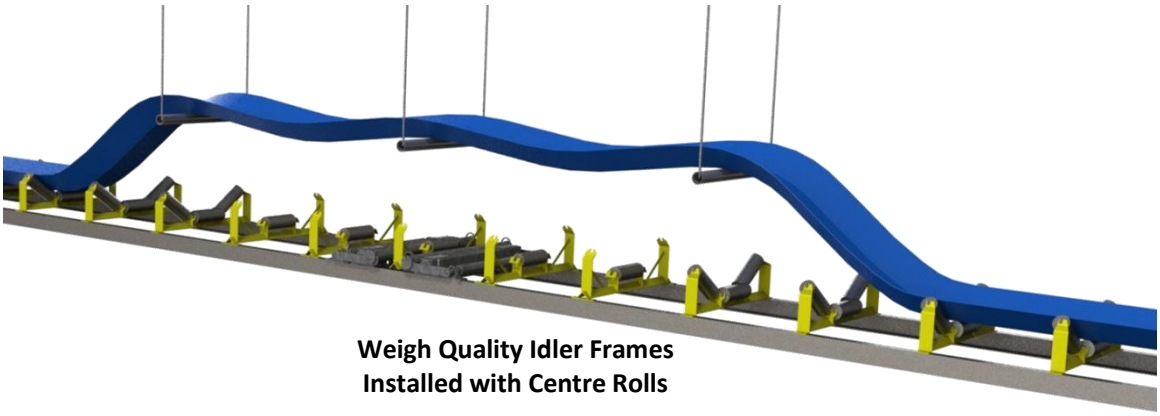

Weigh Quality Idler Frames Installed with Centre Rolls

13) Position the idlers so that they are:
- In line with the stringline
- Are dimensionally layed out as shown on the installation drawing

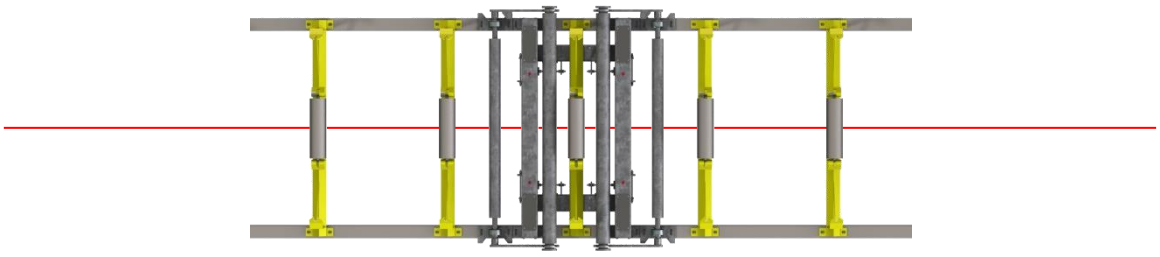

14) Mark out mounting holes on stringers and drill holes to suit the idler mounting feet. Install bolts, washers and nuts and tighten down. Ensure spring washers are used.
15) Re-check idler spacing and centres. Adjust if necessary.
16) Run a further two stringlines (30 lb fishing line) from the same existing idlers as the centre line was tied off to. The stringlines should be approximately 12 mm in from each edge of the roll.

17) Carefully lower the weighframe shipping bolts so that the weighframe now sits on the load cells.

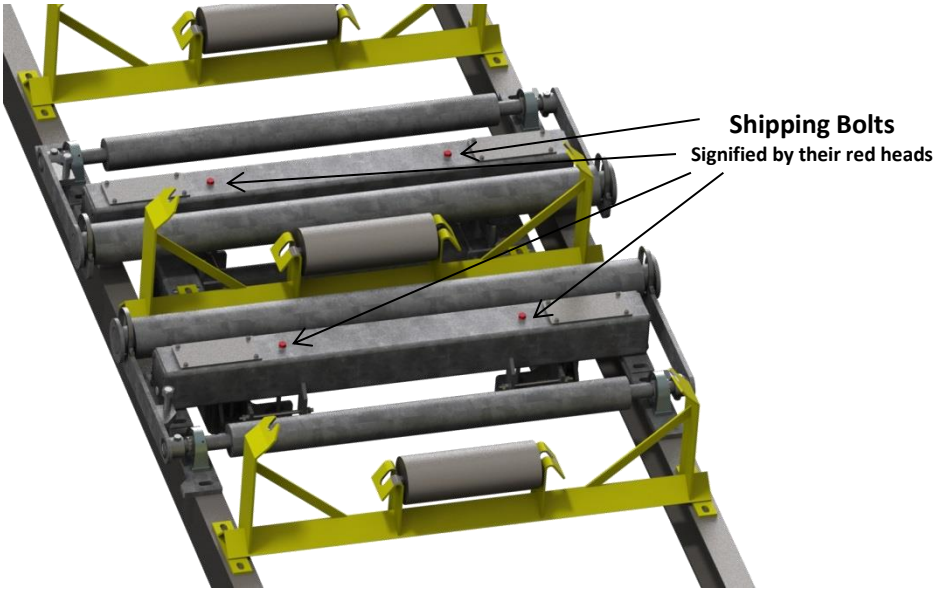

18) Go to the first in-line idler (shown as +C2). Place a spirit level across the top of the centre roll. Adjust the idler roll using the grub screws, so that it is level. If the amount of adjustment required is more than approximately 5 mm, it is better to use a packer under the idler mounting foot.
19) Go to the last in-line idler (shown as -C2) and level centre roll.
20) The in-line idlers should be higher than the existing offset idlers due to their design. The levelled centre rolls should already be in contact with the two stringlines at the edge of the rolls. The in-line idlers should **never** be lower than the standard existing idlers. If they are, they will require packers to be installed under all mounting feet.

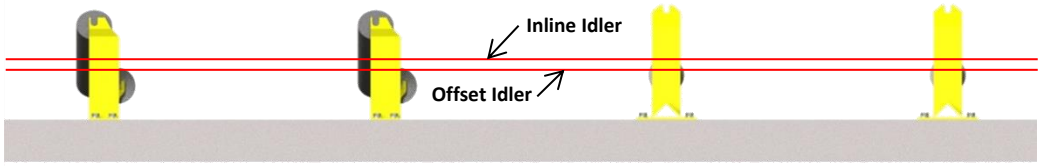

Offset Idlers vs Inline Idlers

Offset Idlers with Packer Plates vs Inline Idler

21) The two reference stringlines should be clear of the centre rolls in the other idler frames (+C1, W1 & -C1). If not, adjust the grub screws on +C2 and -C2 idlers by equal amounts until both stringlines are clear of all centre rolls. When this has been completed, ensure locknuts are tightened. Permissible tolerance is +0.4, -0.0 mm.
22) Proceed to adjust the remaining centre rolls until they just touch the stringlines. Ensure all locknuts have been tightened after adjustment. After all rolls have been adjusted, recheck all rolls are still in contact with the stringlines.

23) Locate the remaining idler rolls and install all wing rolls. Ensure that grub screws in roll shafts are not protruding from the bottom of the shaft.

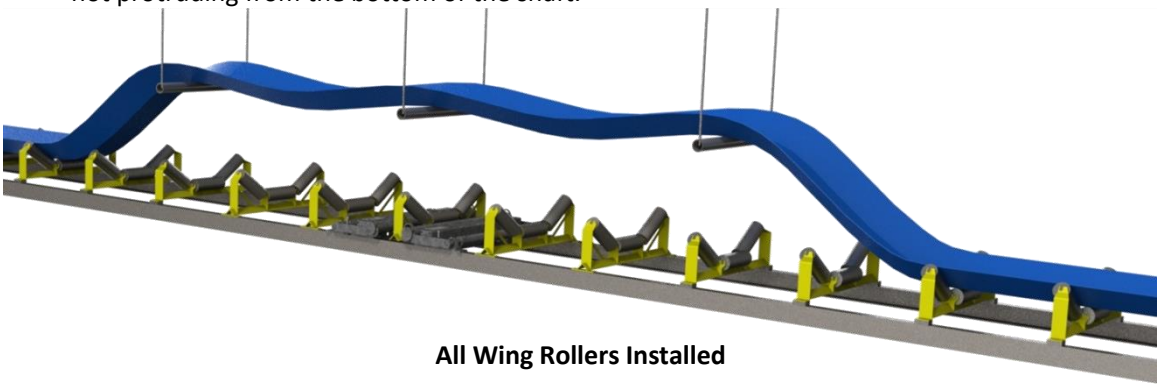

All Wing Rollers Installed

24) Run a further two string lines on both sides of wing rolls similar to the centre rolls.

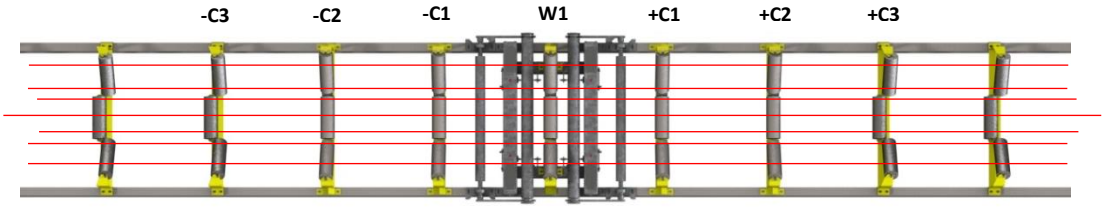

Stringlines

All Stringlines

25) Starting on one side of wing rolls, the same procedure is required to be carried out as the centre rolls. Adjust the wing rolls on +C2 and - C2 idlers evenly so that they are clear of all remaining wing rolls.
26) Go through and adjust all rolls so that they are just touching the stringlines. When this has been completed, ensure that all locknuts are tightened. Permissible tolerance is +0.4, 0.0 mm.
27) Review all adjustments, and if satisfied, remove all stringlines.
28) Carefully lower the conveyor belt. **Do not drop the belt onto the weighframe.**

Belt Scale Completely Installed

Electrical Installation – Encoder Speed Sensor

Description

The belt speed sensor supplied with the belt scale is a digital incremental encoder. It produces a square wave output, the frequency of which is proportional to the belt speed.

The encoder should be connected to a non-driven pulley i.e. not a drive pulley. This is because there could be some slippage between the drive pulley and the belt. The encoder is typically connected to the tail pulley or a “snub” pulley.

The encoder is available in the following models:

100 PPR
200 PPR
500 PPR

The model supplied for your application has been based on the belt speed, and pulley diameter information that was provided. For slower belts, an additional pulse multiplier board may be supplied. This board is located in the belt speed sensor junction box. It allows the pulses from the encoder to be multiplied X1, X2 or X4. The frequency range is typically 80 to 500 Hz.

Mechanical installation

The installation of the encoder can be either by direct connection to the pulley shaft using a solid coupling, or on a separate bracket and spring coupling.

If using a solid coupling, the encoder must use a restraining arm, which is in contact with a fixed part of the conveyor. This will prevent the encoder from rotating with the pulley shaft.

If using the spring coupling method (most common), the spring coupling alignment must be within 1 mm in all axes. If the coupling is not correctly aligned, it will eventually break. Provision must be made so that if the pulley position is changed, the encoder bracket can also be moved to maintain accurate alignment. See drawing “WTMW6” in Appendix B to see typical installation arrangements.

Electrical Installation

The encoder is provided with a three (3) core cable approximately 1 metre long. Therefore the belt speed sensor junction box must be installed within its reach. The cable should be mechanically protected. Refer to drawing “JB010015” (Appendix B) for termination details.

Part Number

The part number(s) for the encoder include the PPR output of the encoder. The typical P/No. is “WXT-XXX” where “XXX” is the PPR. Therefore a 100 PPR encoder would have the P/No. “WXT-100”.

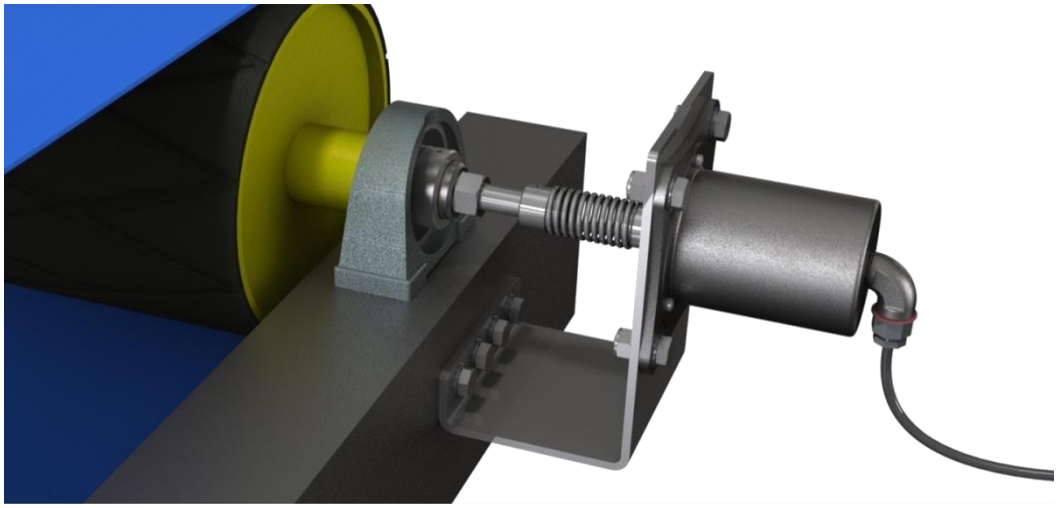

WXT Encoder with Spring Coupling on Tail Pulley

Electrical Installation – Magnetic Pickup Speed Sensor

Description

The belt speed sensor supplied with the belt scale is a stainless steel magnetic pick-up. It is not a proximity switch, and does not require a supply voltage. It produces a sinusoidal output, the frequency of which is proportional to the belt speed. The amplitude
of the voltage output is proportional to the rotational speed of the idler roll/sprocket, and the proximity of the magnetic pick-up to the sprocket. A sprocket is also supplied with the sensor, which is installed on the end of an idler roll. If the sprocket has not been fitted by Web- Tech, it is extremely important that the sprocket be fitted centrally to the idler roll. We suggest that the sprocket be fitted, then rotated in a lathe to check its concentricity.

Mechanical installation

The installation of the magnetic pick-up should be on an idler adjacent to the weighframe. The idler roll used should be the horizontal centre roll The magnetic pick-up should be adjusted so that the sensor "nib" is 0.5 mm from the sprocket tooth. After adjustment and the locknut tightened, the idler roll should be rotated by hand to ensure that no teeth on the sprocket come into contact with the sensor nib.

Electrical Installation

The magnetic pick-up is provided with a two (2) core cable approximately 2.5 metres long. Therefore the belt speed sensor junction box must be installed within its reach. The cable should be mechanically protected.

Part Number

The P/No. for the magnetic pick-up is:

BS-013-01
BS-013-02

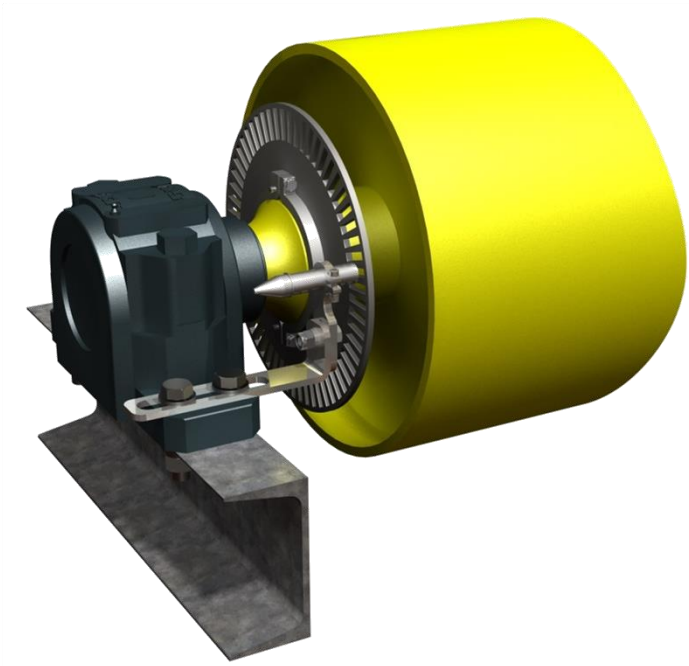

Mag Pickup and Target Disk on Pulley

Electrical Installation – Proximity Switch

Description

The belt speed sensor supplied with the belt scale is a proximity switch. It is used in conjunction with "flags" on a pulley, or specifically designed sprocket. It produces a square wave output, the frequency of which is proportional to the belt speed. A "pull-up" resistor is provided, which is installed in the belt speed sensor junction box. Sufficient flags must be installed so that the frequency output is not less than 10Hz at the slowest belt speed.

Mechanical installation

The installation of the proximity switch should be typically 3 mm to 5 mm from the metal flags. The maximum sensing distance of the switch supplied is 15 mm. The minimum clearance between the face of the switch and any metal past the flags should be twice the sensing distance (30 mm). Ensure that the face of the proximity switch will not come in contact with any of the flags. After adjustment tighten any locknuts.

Electrical Installation

The proximity switch is provided with a three (3) core cable approximately two (2) metres long. Therefore the belt speed sensor junction box must be installed within its reach. The cable should be mechanically protected.

Refer to drawing "WTMW6-01-13" for termination details.

Part Number

The part number for the switch supplied is as follows:

BS-014-02

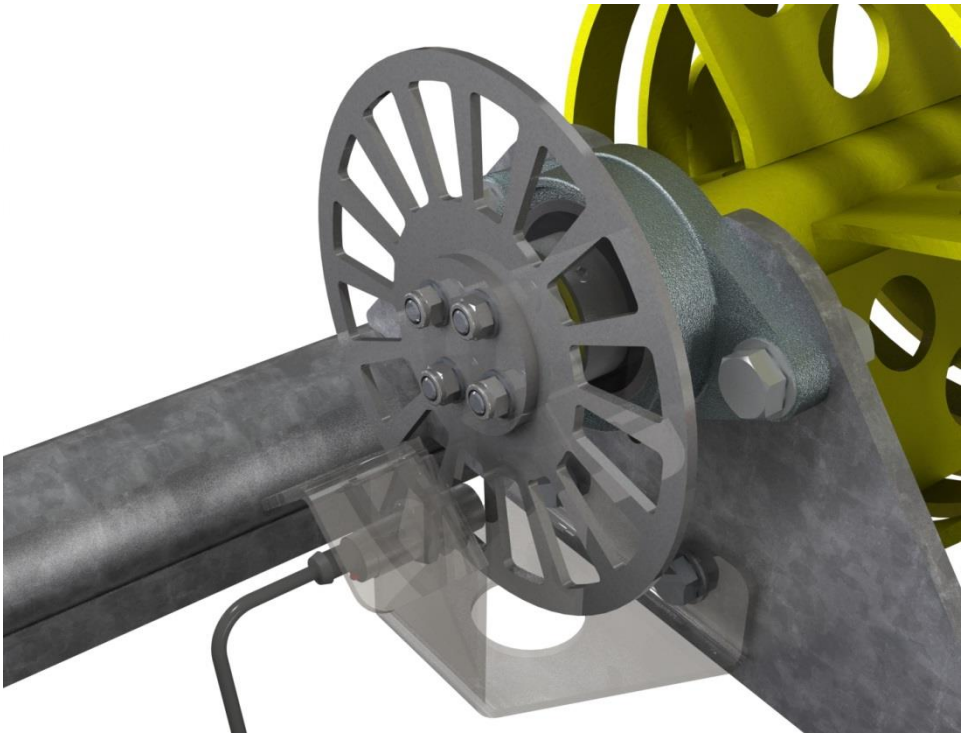

Proximity Switch and Stainless Steel Target Disk Installed on Spiral Tail Pulley

Electrical connection diagrams for the belt scale electronics, load cell and belt speed sensor junction boxes are located in Appendix B of this manual. Electrical installation comprises the following work:

1) Install and connect the "Novus" integrator to mains supply (See "WTMW6", Appx. B).
2) Install and connect load cell wiring between weighframe and load cell.
3) Install and connect cable between load cell junction box and electronics.
4) Install and connect cable between belt speed sensor junction box and electronics.
5) Install cable between electronics and PLC (if required) for output signals.

Belt Scale Electronics

The belt scale is supplied with the following model electronics:
The appropriate electrical connection drawing or the electronics supplied is located in the drawings section of the manual.

Enclosure Mounting

The electronics enclosure is an IP66 RFP or stainless steel enclosure.
The enclosure should be located so that:

1) It is not in direct sunlight (install sunshield if located outdoors).
2) Is not subject to direct washdown.
3) Is not installed in close proximity to high power cables, variable speed drives or vibratory feeder controllers.
4) Not more than 5 metres from the weighframe. Having the electronics located close to the weighframe reduces the chances of electrical interference on the cables. It also makes it easier when carrying out calibrations and fault finding. The weighframe has been supplied with an integral 5 metre cable for connection to the electronics.

Cables

All cables between the load cell/belt speed sensor junction boxes and the electronics should be proper screened instrumentation quality. As the signal levels from these devices are very low, any cable runs between the weighframe/speed sensor and electronics should be carried out so that these cables are not installed close to power cables.
Suggested cable type for each application is as follows:
Load Cell – 4 core overall screened, Belden type 8723 or equivalent.
Belt Speed Sensor – 3 core overall screened, Belden type 8770 or equivalent. Ensure that all cable entries into the electronics enclosure and junction boxes use the correct size waterproof glands.

Cable Terminations

Load Cell junction box – Refer to drawing "SMLCJB-02" in Appendix B of this manual.
Speed sensor junction box – Refer to drawing "JB10015-67" in Appendix B of this manual.

Start Up

Prior to turning on the equipment, or operating the belt scale, ensure the following has been done:

- Double check all electrical connections are correct.
- All mechanical installation has been completed and no tools have been left on the belt.

Start Up Steps

When starting up the system for the first time, use the following steps:

1) Turn on the electronics, and ensure it displays the Mass Rate, Mass Total (MRMT).
2) Start the conveyor. If using variable speed drive, set it in local and ramp the frequency up to 50Hz.
3) The load cell output can be directly read from the electronics. Refer to the electronics manual for the appropriate menu for reading the load cell voltage.

The belt speed sensor output can be read directly from the electronics. Refer to the electronics manual for the appropriate menu for reading the belt speed sensor frequency output. Run the conveyor and ensure that there is a stable output from the speed sensor ±3 Hz

Masterweigh 6

Operation and Installation Manual

Web Tech Australia Pty Ltd
PO Box 4006
11 Electronics St
Eight Mile Plains, QLD, 4113
Ph: 1800 777 906
Fax: 61 7 3841 0005
E-mail: info@web-tech.com.au

Contents

Keyboard Layout and Key Functions 26
MASTERWEIGH 6 26
Keyboard Layout 26
Security Codes 26
Key Functions 26
Keyboard Layout and Key Functions 27
Speed Keys 27
Numeric Keys 27
Menu Entry 1 – Parameter Setup 28
Menu Entry 1 – Parameter Setup 29
To modify factory calibration data: 29
Menu Entry 2 – Pulses Per Revolution Calibration 30
Menu Entry 3 – Load Zero Calibration 31
Menu Entry 3 – Load Zero Calibration 32
Menu Entry 4 – Fixed Weight Calibration 33
Menu Entry 4 – Fixed Weight Calibration 34
Calibration Methods: 34
Menu Entry 4 – Fixed Weigh Calibration 35
Menu Entry 5 – Empirical Span Calibration 36
Menu Entry 6 – Null Level 37
Menu Entry 7 – Auto Zero Tracking 38
Menu Entry 7 – Auto Zero Tracking 39
Menu Entry 8 – Load Cell Inputs 40
Menu Entry 9 – Tacho Frequency 41
Menu Entry 10 – Modification of Filter Constants 42
Menu Entry 11 – Modification of Displayed Units 43
Menu Entry 12 – Modification of Belt Speed Indication 44
Menu Entry 13 – Clearing Mass Total 45
Menu Entry 14 – Real Time Clock (Optional) 46
Menu Entry 15 – Access Code Menu 47
Menu Entry 16 – Report Printing Menu (Optional) 48
Re-Configuring Masterweigh 6 49
Facilities Available 50
Introduction 50
Load Cell Input and Excitation 50
Facilities Available 51
Tacho Input and Supply 51
Electrical Characteristics 51

Contents

Frequency Selection 51
Pulse Output 51
Facilities Available 52
Analogue Output 52
Earthing 52
Display Backlighting 52
System Output Status 52
User Configuration 53
Power Supply PCB (Lower Board) 53
LK1 Grounding 53
LK2, LK3, LK3, LK4 Current loop supply 53
LK6, LK7 Totaliser Pulse Output 53
Potentiometer Adjustments 54
Excitation Level Adjustment 54
Power Supply PCB (Bottom Board) 54
Contrast & Analogue Output Adjustment 54
CPU PCB (Top Board) 54
Field Terminal Strips 55
J3 – Power supply input 55
J5 – System Status Relay 55
J6 – Pulse counter outputs 55
J7 – Auxiliary 24V DC output 55
J8 – Tachometer inputs 55
J9 – Load cell inputs 55
J10 – Analogue Rate output 55
Fieldbus – Profibus 56
Connectors: 56
J2 56
J3 56
J4 56
Link LK1 56
Status Indicators: 56
D1 56
D2 56
D3 56
D4 56
Fieldbus – Profibus 57
Node Address: 57
Profibus Connector (DB9F) 57
Fieldbus – Profibus 58

Contents

Masterweigh 6 Profibus Interface 58
Variable Data Format 58
Profibus Module Data 58
Fieldbus – Ethernet / Modbus TCP 59
Connectors: 59
J2 59
J3 59
J4 59
Link LK1 59
Status Indicators: 59
D1 59
D2 59
D3 59
D4 59
D5 59
D6 59
D7 59
Fieldbus – Ethernet / Modbus TCP 60
Setup in MW6 Menu: 60
Masterweigh 6 Modbus TCP Interface 60
Variable Data Format 60
Modbus TCP Data 60
Fieldbus – DeviceNet 61
Pin outs: 61
MW6 DeviceNet: 61
Connectors 61
J2 61
J3 61
J4 61
Link LK1 61
Fieldbus – DeviceNet 62
MW6 DeviceNet Setup: 62
Node Address 62
Masterweigh 6 DeviceNet Interface 62
Variable Data Format 62
DeviceNet Data 62
Fieldbus – DeviceNet 63
Zero Calibration 64
Span Calibration 65

MASTERWEIGH 6
Keyboard Layout

TOTAL RESET	1	2	3	4
ZERO	5	6	7	8
CAL	9	0	C	MENU
	-	./+	A ABORT	E ENTER

Masterweigh 6 can operate in a protected security, or open mode depending how the user has configured it. See "Security" for set up details. The following text assumes that the operator has gained access to the system.

Security Codes

If a user has entered security codes into the Masterweigh 6, entry to the menus will be restricted. Two four-digit codes can be entered – (see Menu 15 for details). One code (Operator Access) allows the code holder limited access to any data in the menus, for checking only. The other code (Configuration Access) is needed for access to menus and to make changes to calibration and program parameters etc. Note that no access will be given if no code is entered. If security codes have been activated, on pressing the Menu key, the computer asks for the four-digit code. If no attempt is made to enter a code then the display returns to the Mass Rate Mass Total (MRMT) format after 30 seconds. If an invalid code is detected, the display returns to MRMT format immediately. If a security code is detected then limited or complete access is gained to the menus, as appropriate. Once the menu format is exited the code will have to be re-entered for further access.

Key Functions

MENU

This key switches between the main display mode showing "Mass Rate/Mass Total" (MRMT) and the "Menu" mode.

- And ./+

When in "Menu" mode, pressing the (+) or (-) key once will go forward or backward one menu entry. If either key is held down, the menu changes will repeat at a rate of approx. 5 per second. When entering the data, the (./+) key is the decimal point.

A ABORT

When in the "Menu" mode and entering changes or new data, this key enables the user to abort the changes and restore the existing entries. The top level menu screen is then displayed.

C

Similar to "Abort", except that the current screen data only is cancelled and the existing entries restored. The display remains at the current screen.

E
ENTER

In menu mode, the key accepts the default setting or confirms any data entered and moves to the next level in the operating sequence. In MRMT display mode, if the “Enter” key is pressed, the current CPU (central processor unit) status is displayed, and also the number of times the CPU has been restarted.

If the display is flashing, the CPU fault status may be viewed by pressing the Enter key whilst in the MRMT display mode.

Speed Keys

TOTAL
RESET

When this key is pressed MW6 clears the accumulated mass total.

ZERO

Activation of this key takes the operator directly to the belt zero function without having to scroll through the menu structure.

CAL

When this key is pressed, the operating display jumps to the fixed weight calibration function, ready to span the system

When this key is pressed, the display display backlighting operates.

Numeric Keys

These keys are used to enter calibration data.

Menu Entry 1 – Parameter Setup

Menu 1 is used firstly to enter the maximum capacity of the scale and the increment size.

Menu 1 can also be used to access and modify the precision zero reference and reference voltage, by pressing the "C" key. This data has been factory set, and does not reprogramming unless the unit has been reconfigured.

1) At Menu Entry 1, press Enter to examine or modify the maximum capacity of the scale, the precision of the increment size, and the remote counter pulse width.

Menu Entry: 1 Parameter Setup

2) At this step, the current scale capacity is displayed. A new value may be keyed-in, then press Enter to continue. Otherwise press Enter with no data entry to retain existing values and continue. This value sets the 100% point for the 4-20mA mass rate output signal. Note that the system can measure mass rates above this value (assuming the instruments remain within their normal operating range), and higher values will be shown on the screen and totalised. However, the 4-20mA mass rate output signal will show 20mA for all mass rates above this value.
   NOTE: If units can be changed to tons, lbs, or kg if preferred, within Menu Entry 11.

Current Capacity = 1000.000 tonnes/hr Enter new capacity:

3) This step displays and allows alteration to the mass total increment. This increment is used for both the mass rate and the mass total displays. Enter the new value required and press the Enter key. No change is made if Enter is pressed without data entry. Note that the increment size programmed is also the increment size to cause one pulse output from the totaliser. Also, do not change the increment size during normal operation, as the change in setting will invalidate any existing accumulated mass total.

Mass total increment = 1.000 tonnes Enter new inc. (10--0.001): 0.000

4) This step displays and allows alteration to remote counter pulse width; this value is limited to between 20ms and 1000ms. Note the value entry should be in multiple of 10ms, ie: 20, 30 ... 990, 1000. No change is made if Enter is pressed without data entry. One pulse is outputted each time the mass total increases by one increment (as set in step 3 above).
   Enter a pulse width that will match with the remote counter, or PLC response time, but keep the following in consideration when selecting this value: The pulse output can go no faster than the value you just selected, but the accumulation of the mass total may, and so the remote totaliser will fall behind the actual mass total. e.g. if the pulse width is set to 100mS, then at it's fastest rate, the output will be "on" for 100ms, then "off" for 100ms. This will give a maximum output of 5 complete pulses per second (100mS on and 100mS off = 200mS per total pulse cycle). Therefore, if the feeder is running faster than 5 increments per second (= 18000 increments per hour), then the remote total will be wrong. E.g. for an increment value of 0.01tonnes, the limit will be 180tph.

Remote Totaliser Pulse Width = 100ms Enter new value: (20-1000):

To modify factory calibration data:

Menu Entry: 1 Parameter Setup

5) At Menu Entry 1, press the "C" key to gain access to the factory calibration data. The correct values for these calibration constants have been engraved onto the main board of the Masterweigh 6 stack (the top board). Check that the values that are programmed are the same as the engraved values, and modify the values in the menu as required. This is normally factory set, and is only to be programmed if the electronics is re-configured.

WARNING Calibration Data Do not modify -- Press A to continue

6) The display will warn the operator not to modify data and to press A to exit and to continue. Press the Enter key at this point for access to the “Zero Reference”.

Calibration zero = x.xxx mV Enter new zero ref.: 0.000

7) Enter new data and/or press the Enter key to proceed.

Precision ref. = x.xxx mV Enter new precision ref.: 0.000

8) Now access to the precision reference has been gained. Enter new data and/or press the Enter key again.

Press E for Rate O/P span calibration Else press A

9) Either exit at this step by pressing the "A" key, or press Enter to access the menu which exercises the 4-20mA circuit.

Rate O/P = x.xxmA C for Next, E to reset unit

10) Pressing "C" steps through the Rate O/P's to the desired value namely: 20.0, 10.04, 5.02, 7.53, 6.27, 5.645, 5.335, 5.178, 5.099, 1.790mA. Press Enter to reset unit. (A current meter needs to be connected across pins 1 & 2 of J10, or in series with the load if connected).

Menu Entry 2 – Pulses Per Revolution Calibration

This calibration is carried out with the belt moving. The number of complete belt revolutions over a time period is counted by the operator, and the Masterweigh counts the pulses returned from the speed sensor device. The revolutions are then entered using the keypad and the pulses/rev calculated by the Masterweigh and then saved.

To enable the revolutions to be counted, a point on the belt should be marked with paint, and a suitable point on the framework chosen close to the belt. The count is then started as the belt mark passes this point and stopped as the mark again passes this point after the greater of 5 minutes or 5 belt revolutions.

1) At Menu Entry 2, press Enter to proceed with calibration.

Menu Entry: 2
Pulse per rev = 1000 Revs=5

2) If the pulses per rev are known, then manually key in the number of pulses and press Enter. Otherwise simply press Enter to continue.

Manual Entry of Pulse/Rev
Or press Enter to continue

3) Manually key in the number of revs (for the above number of pulses) and press Enter. Otherwise press Enter to continue.

Manual Entry of N. of Revs
Or press Enter to continue

4) At the moment the belt mark passes the fixed point chosen, press Enter to start the Masterweigh counting pulses, and start counting revolutions. Note that the display panel will show the counting.

To start belt pulse count, Press E
Pulse counted = Time =

5) After at least 5 minutes, press Enter again to stop the count as the mark passes the fixed point.

To stop belt pulse count, Press E
Pulse counted = Time =

6) Key in the number of revolutions counted, and press Enter to confirm.

Enter number of belt revolutions:
Pulse counted = Time =

7) Press Enter to save the number of pulses/rev just calibrated, otherwise press A to abort and return to the original values (if any).

Pulse per belt revolution =
Press E to save, otherwise press A

Menu Entry 3 – Load Zero Calibration

This menu entry enables the operating zero to be calibrated. A specified number of belt revolutions are run (as determined by Menu 2), with no material or calibration weights on the belt. If the zero is correct then the mass total accumulated over the period will be zero.
The display shows the currently stored value in millivolts, as read at the load-cell input including any contribution made by the autozero function.

NOTE: The zero value is automatically adjusted if the excitation voltage changes.

1) At Menu Entry 3, press Enter to proceed.

```
                Menu Entry:  3
Zero cal. =  2.563mV      2.563mV Ztrack
```

2) (Optional) Using a digital voltmeter, measure the belt zero error value (in millivolts) at the loadcell, or read the mV level displayed in Menu 8.
   Manually key in the value to the Masterweigh and press the Enter key to accept, or press Enter with no data entered to continue and allow Masterweigh to automatically carry out a zero calibration.
   NOTE: Entering this value does not negate the need to perform a zero calibration.

```
Manual entry of Zero Error, 0.000mV
Or press Enter to continue
```

3) The current zero error is now displayed as a mass rate. Press Enter for the loadcell calibration procedure.

```
Press E to continue
Mass Rate =   0.000
```

4) The mass total will now display zero. Check that the belt is empty, then press the Enter key to begin the zero calibration test.

```
(Zero Reset) To Start zero cal, Press E
Mass Rate =   0.000      Revs =   0.0
```

5) The difference between the current loadcell zero and the actual load reading is accumulated over the test duration, which is the total number of belt revolutions specified in menu 2.

```
To Abort zero calibrations, Press A
Mass rate =   0.000   Revs =    0.0
```

The test can be aborted at any time by pressing the Abort key. If the test is aborted, the existing value of the zero calibration is used. This zero calibration value normally includes contributions from both the load zero calibration (as carried out in this menu entry) and the auto zero tracking function. It is thus possible by entering the menu to this level and then aborting to reinitialise the working copy of the zero calibration and remove any auto zero tracking contribution.

6) This display will come up automatically when the belt has completed the required number of revolutions. The measuring phase of the test has finished and the resulting mass total is displayed. This mass total should be approximately zero, however if non, zero then a new loadcell zero may be required.

To calculate new calibration, Press E
Mass Total = 1.150 Revs = 10

7) The new loadcell zero, or offset, is displayed in millivolts. Press the Enter key to save this value as the new loadcell zero, or press Abort to exit without saving.

Zero Error = 2.756 mV
Press E to save, otherwise press A

Menu Entry 4 – Fixed Weight Calibration

This menu entry allows the automatic calibration of the load cell span. The test is run over a pre-set number of belt revolutions, as in Menu 2, during which calibration weights (or weigh chains) are placed on the belt or weighframe. A mass total is accumulated in the course of the test. This total is then compared with an expected or "target" weight and the span adjusted accordingly. The display shows the currently stored load cell span value. The span number shown is just an engineering number proportional to the “gain” required i.e. the higher the number, the higher the reading.

1. Press Enter when at Menu Entry 4 to proceed.

Menu Entry: 4 Fixed weight calibrate, span = 222.1

2. At this stage the span factor can be set manually by entering the desired span factor and pressing the Enter key. If no value has been entered, then no change is made to the stored value and the next level is entered.

Manual entry of span factor, 0.000 Or press Enter to continue

3. Masterweigh 6 has been provided with two methods of spanning (calibrating). Fixed Weight or Empirical (Menu 5). After initial calibration, the user can, by toggling "Fixed Weight" to "R-Cal", perform a calibration verification. An explanation of this procedure follows this text. For initial calibration, toggle this menu step to Fixed Weight by pressing the Clear "C" button, if R-Cal has been selected.

Span Cal Mode = Fixed Weight Press Clear to Change, Enter to accept

4. The target weight is the mass total that is expected over the number of belt revolutions as currently set. (Menu 2). This target weight may at this point be changed to suit the calibration weights being used. Note that this value will generally be determined by running this procedure and recording the result, immediately after performing an empirical calibration. (Menu 5). A load zero calibration should generally be performed (Menu 3) before running this procedure. If a new value is entered then pressing the Enter key will save this as the new target weight. If the Enter key is pressed without entering a target weight, then no change to the stored value occurs.

Current Weight = 120.8 tonnes Enter target weight: 0.000 tonnes

5. The current mass rate is shown; the number of belt revolutions is zeroed. Press the Enter key to start the test.

Press E to continue Mass Rate = 0.000

6. Once started the test will run until the currently specified number of belt revolutions has been counted. (Refer to Menu 2).

To Start span calibration, Press E Mass Rate = 0.000 Revs = 0.0

7) During this step the weight is totalised over the specified number of belt revolutions, after which time the totalisation is automatically stopped. If the Enter key is pressed during the test, then the totalisation will be terminated, with a mass total of zero. The test can be aborted at any time by pressing the Abort key.

To abort span calibration, Press A
Mass Rate = 1543.000 Revs = 1.507

8) The resulting mass total is displayed along with the number of belt revolutions counted. Press the Enter key to calculate the new span calibration factor.

To calculate new calibration, Press E
Mass total = 120.000 Revs = 10

9) The new derived load cell span is displayed. Press the Enter key to save this value as the new loadcell span. Press the Abort key if this value is not to be stored.

New span factor = 223.580
Press E to save, otherwise press A

10) Should the span value calculated be outside the range 0.1 to 3000 then the Masterweigh will display a warning message. Under these circumstances the new span will not be saved, and the unit will revert to the value previously stored.

Span of 345678.123 is invalid
Press A to continue

Calibration Methods:

1) Ideally conveyor belt scales should initially be calibrated using empirical data obtained from accurate static scales. However, in most situations this task is impossible to achieve, but the fact remains that there is no substitution for data being input to Masterweigh 6 that has been derived from actual material bearing down on the load cell via the weighframe/carriage at normal conveyor speeds.
2) A calibration chain, a device that rolls on top of the belt provides the next best method of calibration. It imparts load to the load cells through the belt, but can not simulate belt tensions as a fully loaded belt does.
3) Static calibration weights are often used where a chain is impractical to use. Bars of a known weight are loaded directly onto the weighframe and hence simulate a load. This method does not take into consideration belt tension or weight transfer through the belt. It does however, exercise the weighframes mechanics.
4) R-Cal is an electronic method of checking the calibration. A simulated loadcell signal is created by running the belt empty and electronically unbalancing the load cell by switching in a reference signal across one arm of the Loadcell Bridge.

This method provides a reasonable method of quickly checking a weightometer but is no substitution for the aforementioned calibration methods.

The software required to implement this function is supplied in all Masterweigh 6 units but the hardware required for the use is an optional extra and therefore only supplied to order.

Assuming that your system is rigged for R-Cal, proceed as follows.

Menu Entry 4 – Fixed Weigh Calibration

Initially, calibration Menu 4 should be accessed and the Enter key pushed until the sub menu Span Cal Mode is reached.

Menu 4:

Span Cal Mode = R-Cal Press Clear to change, Enter to Accept

Toggle the clear key until R-Cal has been selected.

Now proceed as for normal calibration which is performed as described under Menu Entry No. 4.

When Masterweigh 6 completes the test, note the number but do not accept it by pressing enter. Press the Abort key.

The total achieved should be logged and future R-Cal tests reference to it. If the value recorded in subsequent tests exceeds +/- 0.5% of the original value perform a full calibration using weights etc.

NOTE: Zero system prior to R-Cal test.

Menu Entry 5 – Empirical Span Calibration

This menu entry enables the manual entry of totalisations and the resultant recalculation of the load cell span. To use this calibration facility, it is necessary to weigh a quantity of material with the belt scale and then to accurately determine the actual mass of that material by independent means (i.e. via a weighbridge or static scale). The two totals are then entered and the Masterweigh computes the new span factor.

1) At menu Entry 5, press Enter to proceed.

Menu entry: 5 Empirical calibration, span = 211.7

2) Enter the exact mass total, as measured by the weighbridge. Press Enter when the data is correct.

Enter weigh bridge total: 0.000

3) Enter the mass total as measured by the weigher. Press Enter.

Enter belt scale total: 0.000

4) Press Enter to store the new span value as the load cell span calibration factor. Press Abort if no update is required. Press Menu and Enter to save.

New span = 205.6, previous = 211.7

Menu Entry 6 – Null Level

This entry displays the level at which the load is considered to be zero. This allows any variations in belt weight to be shown as zero. Below this level, the mass rate display will show zero, no increment of the mass total will occur, no pulses will be output to remote counters and the mass rate analogue output will be set to 4.0mA.

1

Menu Entry: 6 Null Level = 20.000 tonnes/hour

2

Max Mass Rate: 23.195 Press C to Clear, Press E to Continue

3

Enter a new null level? 0.000 Mass rate = 23.2 tonnes/hour

1) At Menu Entry 6, press Enter to proceed.
2) Max Mass rate will latch on the highest mass rate value recorded automatically.
3) Key in the new Value as observed in menu no.2. Press Enter when the data is correct.

Note on selecting the null level: This entry is used to mask variations in mass rate caused by variations in the belt weight, caused by the belt splice etc. To select the null level, observe the mass rate shown over several belt revolutions with the belt running completely empty (no product or calibration weights).

Take note of the highest equivalent mass rate reached, and then enter a value slightly higher than this level. E.g. if the mass rate was swinging from -20 to 0 to +20 select 22 as the null level. On a correctly installed and aligned weigher, this figure should be approximately 1% of capacity.

Menu Entry 7 – Auto Zero Tracking

This entry specifies the mass rate level below which automatic zero tracking occurs and the number of belt revolutions required before a new zero calibration value is established. Control of the Autozero Alarm relay is achieved from this menu. The auto zero mode will not be entered, or continue unless the mass rate remains below the specified level. The value is normally set at approximately 1.5% of capacity. A qualifying time delay period is also provided to ensure that the belt is completely free of material. Should it be necessary to clear the present auto zero value, then this can be done by entering Menu 3 (load zero calibration), then aborting after starting the test. A "z" will be displayed at the right hand side, bottom line, of the main mass rate/mass total display, when the auto zero conditions are met and the Masterweigh is collecting data for a possible new zero level.

NOTE: The auto zero tracking procedure is inhibited under the following conditions:

- Masterweigh not in the mass rate / mass total display mode
- Input tacho frequency less than 5Hz.

It may be required that the user wishes to know if the Autozero function is being forced to zero out, belt zero errors which could be considered as abnormal. This is achieved by setting a window around the signal from the load cell during any period that the belt is considered to be running empty by Masterweigh. The window is set in this menu at step 5 & 6. If the signal from the load cell falls outside these ‘user preset’ levels then the Autozero limit alarm relay will energise.

Under some circumstances it may be necessary to increase the tolerance at which Masterweigh flags in the display that a negative loadcell excursion has taken place which is greater than the level set in the Auto zero x 2.

The error is only flagged in the local display in the form of an "E" at the right hand side of the display where the "Z" is normally shown.

Step 7 allows the user to increase the tolerance before displaying the "E". At step 8 the user can toggle the above function on or off depending on preferences.

NOTE: Under normal running conditions negative loadcell excursions should not be occurring! Check the weigh area for abnormalities.

1) At Menu Entry 7, press Enter to proceed.

Menu Entry: 7 Zero Track if greater than 20.0 for 5 revs

2) Enter the new autozero level in mass rate units and press the Enter key. If the Enter key is pressed with no data entry then the stored value remains unchanged.

Auto Zero Level = 20.0000 tonnes/hr Enter New Level = 0.00000

3) Enter the period required (in belt revolutions) over which autozeroing occurs. Note that the number of belt revolutions should be chosen such that the total zeroing period is of the order of 5 minutes or more. This will ensure that accurate zero levels are produced. Note that the actual zero level used by the Masterweigh will not be updated until a zeroing period has been completed. If a new value is entered and the Enter key is pressed then that value is saved, otherwise no update occurs.

Auto zeroing period = 5 revs Enter new period: 0

4) This step enables the qualifying delay time to be set. Choose a time that will ensure that all material is off the belt. The delay time commences when the mass rate falls below the minimum level set above.

Delay before auto zeroing = 60s Enter new level:

5) Step five allows the user to enter the value in mV below which it may be considered that an invalid Autozero is taking place.

Auto Zero high Limit – 0.000mV Enter new level: 0.000mV

6) Step six allows the user to enter the value in mV above which it may be considered that an invalid Autozero is taking place.

Auto Zero high Limit – 0.000mV Enter new level: 0.000mV

7) Increase this factor if the letter "E" is being encountered in the main display.

Auto Zero Error Level = 2 times Auto Zero Enter new value: 0

8) The function of displaying the letter "E" can be switched on or off here by pressing the "C" button.

Autozero Error Display is : On Press Clear to Change, Enter to Accept

Menu Entry 8 – Load Cell Inputs

This entry displays the load cell input in millivolts. The displayed value is unaffected by the load zero, load calibration, and zero tracking functions. The entry also displays the excitation voltage as currently sensed by the Masterweigh. It is displayed to the nearest volt only, ie. 10V is in the range 9.501 to 10.5V. It is updated once every 3 minutes.

This display enables a user to confirm that the Masterweigh is correctly sensing the excitation voltage and thus that all links etc. are correctly installed. Incorrect excitation sensing will result in inaccurate and unstable mass rate measurements. Access is also available to the output of the voltage to frequency converters.

1) Menu Entry 8 displays the load-cell millivolt output and excitation voltage.

Menu Entry: 8
Loadcell = 16mV, (Extin. = 10V)

2) Press Enter to access the current V to F output.

V to F = xxxxx
Press Enter to Continue

3) Press Enter again to return to Menu Entry 8.

This facility is for technician's use only.

Menu Entry 9 – Tacho Frequency

This entry displays the current tacho frequency in hertz, (the input range is 5Hz to 1000Hz) and switches between software or hardware inputs.

1) Press "E" to enter the menu to select the source of the tachometer signal.

Menu Entry: 9 Tacho Frequency = 250.005Hz

2) Press "C" to change (or toggle) between the available pulse sources which are :
   - Hardware – input signal to the system as generated by the speed sensor (magnetic pick-up or optical tachometer)
   - Simulated – an internally generated 100Hz signal that is always on.
   - Ext.Con – an internally generated signal that is only on when an external contact is closed between terminals “TG” and “T In” on terminal strip J8.

Tacho Source = Hardware Press Clear to Change, Entry to Accept

3) Press Enter to accept and return to the Menu Entry 9.

Tacho Source = Software Press Clear to Change, Enter to accept

4)

Tacho Source = Ext. Con Press Clear to change, Enter to Accept

Menu Entry 10 – Modification of Filter Constants

Filtering can be applied to the following functions:

- Displayed mass rate
- 4-20mA mass rate output
- Tacho input

The level of filtering is specified by a constant that may be in the range 1 second to 120 seconds. Time constants greater than 120 seconds have the same effect as a 120-second constant.

A time constant of 1 second is equivalent to no filtering. Time constants greater than 1 second introduce a delay in the rate of change of the filtered function.

1) Press Enter to modify the display filter time constant.

Menu Entry: 10 To modify Filter factors press Enter

2) The display mass rate filter time constant is shown. When a time constant of greater than 1 is selected, the main mass rate display is damped. A new value for the display filter constant may be entered.

Display Time Constant is: 2s Enter a new Time Constant:

3) The 4-20mA mass rate output filter time constant is now displayed. A new value for the mass rate output filter constant may be entered.

Rate O/P Time Constant is: 4s Enter a new Time Constant:

4) The tachometer input filter is displayed here and a new constant applied if necessary.

Tacho I/P Time Constant is: 1s Enter and new Time Constant:

Note: At each step, pressing the Enter key will save the new value. If a new value has not been entered, then the current value is unchanged.

Menu Entry 11 – Modification of Displayed Units

The displayed units for mass rate and total may be selected from tonnes, lbs, tons or kgs. The displayed units for mass rate will be the same as those selected for mass total, ie. tonnes/hour, lbs/hour, tons/hour or kgs/hour.

1) Pressing the Enter key will advance to select mass units.

Menu Entry: 11 To modify display units, press E

2) At this stage the mass units which can be displayed are shown. To select the mass unit required press the number key associated with it, then press the Enter key. The units number selected will be shown in the lower right hand corner of the display. Numbers greater than 4 will not change the currently displayed mass total and mass rate units. Pressing the Enter key without entering a new unit number, or pressing Abort, will not change the currently displayed units.

1 = ton	2 = lbs
3 = kgs	4 = tonnes

3) Press Menu and Enter to save.

Menu Entry 12 – Modification of Belt Speed Indication

This entry displays the current belt speed in metres/second (or feet/minute if the mass rate unit is in tons or lbs) based on the total belt length in metres. This Menu does not need to be programmed, however it may be useful.

1) This entry shows the current calculated belt speed. Press Enter once view the current belt loading.

Menu Entry: 12 Belt speed = 3.10m/s

2) The current calculated belt loading will be displayed in the appropriate units (kg/m or lb/ft, depending on the mass units selected). This belt loading is calculated from the current Mass Rate and belt speed.

Belt Load = 75.015 kg/m Press E to continue

3) The current value for the belt length is shown. If the belt length is known, enter it here.

Current belt total length = 200.000m Enter new belt total length:

4) If the belt length is not known, and an accurate belt speed has been physically measured from the belt itself, the Masterweigh can calculate the belt length. Enter the measured belt speed in the units shown then press Enter to calculate the new belt length.

Enter measured belt speed in metres/min: Press E for belt length

5) If you entered a belt speed, this value will be the calculated belt length. If it appears correct, Press enter to save the value, or abort to ignore the calculation. Note that if you entered a belt length in step 3 and not a belt speed in step 4, this value will be meaningless.

Calculated belt length = 0.000 metres Press E to save, otherwise Press A

Menu Entry 13 – Clearing Mass Total

1) When the mass total on the "mass rate/mass total" display (MRMT) is to be zeroed, press C at Menu Entry 13. All totalised figures are then cancelled by the integrator.

Menu Entry: 13 Press C to clear Mass Total

Press Menu, then Enter to return to the MRMT display.

Menu Entry 14 – Real Time Clock (Optional)

This menu controls the operation of the Masterweigh 6 real time clock. The real time clock is a separate module with its own battery power source that will continue to keep accurate time, even in the case of power loss to the Masterweigh 6 unit. This menu is only accessible if the real time clock module has been installed. Step 1 displays the following current time, date and day-of-week information.

1) Pressing Enter advances to:

Menu Entry: 14 Wed Time = 09:12:43am Date =

2) Here a free running elapsed time count is displayed. Pressing clear will reset the elapsed time counter. Pressing Enter advances to:

Elaspsed Time = Press clear to reset 0 days 00:19:58 hours

3) The Masterweigh 6 real time clock can be configured to display the current time in 12 or 24-hour mode, the selection is made in this menu. Pressing Enter advances to:

Clock is currently in 12-hour mode Press ± to change, Enter to accept

4) Here the current time is displayed and may be modified. A 4-digit time string of the form "HHMM" needs to be entered. Where HH is the desired hours, ie. "12", "03", etc, and MM is the desired minutes, ie. "45", "07", etc. E.g. to enter 9:30, press 0,9,3,0,E. Pressing Enter advances to:

Time = 09:13:56am Enter new time (HHMM):

5) Here the current 12 hour time format postfix is displayed, and may be modified. The user can select either "am" or "pm". Pressing Enter advances to:

Time is currently: am Press + / - to change, Enter to accept

6) Here the current date is displayed and may be modified. A 6-digit time string of the form "DDMMYY" needs to be entered. Where DD is the desired days, ie. "27", "04", etc. MM is the desired months, ie. "11", "05" etc and YY is the desired years, ie. "94", "01"etc. E.g. to enter 12 Feb 2000, press 1,2,0,2,0,0,E. Pressing Enter advances to:

Date = 29/06/94 Enter new date (DDMMYY)

7) Here the current day of the week is displayed and may be changed by the user. Pressing the "+" or "-" key toggles through the days of the week. Pressing Enter advances to:

Day of the Week = Wednesday Press + / - to change, Enter to accept

8) Here a count of power-on hours since the last unit re-configuration is displayed. This display is provided for information only, it is not user adjustable. Pressing Enter returns to step 1.

Power of hours = 1 Press Enter to continue

Menu Entry 15 – Access Code Menu

Masterweigh 6 provides for 2 levels of user configurable access code. If no access codes are activated, all Masterweigh 6 menus are accessible all the time. An “Operator” and a “Configuration” access code may be entered. As soon as an access code is activated, the user cannot leave the main mass rate/total menu and gain entry to the menu system without entering a valid/correct access code.

Entering the correct Configuration access code allows full access to all Masterweigh 6 menus and parameters. Entering the correct Operator access code allows limited access to the Masterweigh 6 menu system.

1) Unless the special security key has been installed in link 3 of the CPU PCB, the following menus cannot be accessed. If the security key is installed, then pressing Enter advances to:

Menu Entry: 15 Press Enter to modify access codes

2) Here a new Operator access code may be entered; this can be a number in the range 1 to 32766. Note that entering and Operator access code of 0 (zero) clears the Operator access code. If the security key is installed, then pressing Enter advances to:

Operator Access Code: Enter Access Code:

3) Here a new Configuration access code may be entered, this can be a number in the range 1 to 32766. Note that entering a Configuration access code of 0 (zero) clears the Configuration access code. Pressing Enter returns to step 1.

Configuration Access Code: Enter Access Code:

Menu Entry 16 – Report Printing Menu (Optional)

This menu controls the automatic report printing function of the Masterweigh 6. This menu is only accessible if the real time clock module has been installed. It is possible to configure the Masterweigh 6 to automatically produce a report, via the RS232 serial port, on either a time or mass total basis. It is also possible to manually command a report at any time. The format of the report is:

Masterweigh Report
Date = 29/06/00
Time = 12:01:41
Mass total = 2474450 tonnes
Mass rate = 5380 tonnes/hour

1) Menu step 1 displays the following. Pressing Enter advances to:

Menu Entry: 16
Automatic report printing Off

2) Pressing Clear will cause a report to be immediately printed via the RS232 serial port. Pressing Enter advances to:

Press Clear to print report NOW
Press E to continue

3) Pressing Clear toggles the report mode between: Off, Time based, or Total based
Pressing Enter when report mode is Off, returns to Step 1 above.
Pressing Enter when report mode is Time based advances to:

Report Mode = Off
Press Clear to change, Enter to Accept

4) Here the time based reporting period is displayed and may be modified. The time period entered here will cause the Masterweigh 6 to automatically print a report via the serial port every time the period expires, ie. a report period of 4 hours will cause a report to be automatically printed at midnight, 4 am, 8 am, noon, 4 pm, 8 pm, etc. Pressing enter here returns to step 1 above. Pressing Enter when report mode is Total based advances to:

Report every 1 Hour
Enter new value: 0 Hours

5) Here the total based reporting increment is displayed and may be modified. The mass total increment entered here will cause the Masterweigh 6 to automatically print a report via the serial port every time the increment is added to the mass total, ie. a total increment of 2500 tonnes will cause a report to be automatically printed at 20000 tonnes, 22500 tonnes, 25000 tonnes, 27500 tonnes, etc. Pressing Enter here returns to step 1 above.

Report every: 100 tonnes
Enter new value: 0 tonnes

The RS232 Parameters are:

Baud	19200 bps
Data bit	8 bits
Stop bit	2 bits
Parity	None

Re-Configuring Masterweigh 6

Under some circumstances Masterweigh's memory can be corrupted so that correct operation of the unit is not possible. This condition can occur if Masterweigh has been subjected to severe electrical noise or spikes.

This phenomenon usually occurs on 240/110V AC power lines; however they can also appear on the load cell input cables as well as the tachometer cables. Masterweigh has been protected as far as possible; however, severe noise or spikes can get through.

Once any part of memory has been corrupted Masterweigh will detect it and automatically flag an error. If the corruption has only changed data, an error may not be detected and some erroneous results may occur. The only way to clear the memory of this data is by re-configuring.

Switching the power off and on will not clear the memory. The act of re-configuring causes all the calibration data to be lost and replaced by factory data. The calibration data specific to your application can easily be re-entered if you have kept a note of what was in the menus.

Menu 1 however, does have specific data that is logged on the main PCB under Calibration zero and Precision ref.

NOTE: LOG ALL CALIBRATION DATA, AS YOU MAY NEED TO MANUALLY REENTER IT AT A LATER DATE.

To Re-configure Masterweigh 6 Proceed as Follows:

1) Switch off Masterweigh.
2) Simultaneously press the "Backlight" and "Abort" keys.
3) With both the above keys pressed switch Masterweigh on.
4) The display will now show the message: Press C to Configure Any other key to continue
5) Now press the C key and Masterweigh will return to normal running mode.
6) Masterweigh is now configured to factory defaults.
7) Press Menu to enter Menu entry 1, then press C to enter the calibration data section. The display will warn you not to continue. Press Enter to continue.
8) The display will request a new Calibration Zero to be entered. Enter the value that is engraved onto the right hand side of the main PCB under the label "Cal Zero", then press E.
9) The display will request a new Precision Reference. Enter the value that is engraved onto the right hand side of the main PCB under the label "Prec. Ref.", then press Enter.
10) Press M then E to return to normal running mode.

Remember: If MW6 is re-configured all calibration data is lost! Keep Notes.

Introduction

The Masterweigh is a precision microprocessor based instrument for accurate integration of mass totals in belt scale applications. The "core" of the highly successful Masterweigh design has been in operation for many years and has been proven in the field and tested by the National Standards Authority of Australia. The tests on the core proved that the instrument is accurate to 0.1% over its operating range. The operating environment is based on a series of discrete Menus. Each menu allows the user to set up a working environment or calibrate the system. For a detailed description of each menu, refer to Section OP-3 - OP-22 of the manual. Note that detailed information relating to the keyboard operating command procedures is to be found earlier in this manual.

Load Cell Input and Excitation

The Masterweigh is designed to accept a loadcell millivolt signal in the range 0 to 32 millivolts with a resolution of approximately 4 microvolts. An on-card voltage source provides excitation for the load cell. This source can provide excitation for up to four 350 ohm load-cells in parallel. The excitation is not precisely controlled, but is maintained within approximately 1 percent of the set value. The Masterweigh monitors the excitation voltage and automatically compensates for any voltage change that may occur. The excitation is adjustable over a wide range to enable optimum performance to be obtained from a wide variety of load cells and is normally set for 10.00V. The Masterweigh is configured to provide a positive excitation voltage referenced to ground (unipolar). The positive voltage is continuously adjustable from +4 to +12 volts. The Masterweigh is factory set for a unipolar excitation of 10 volts. Following adjustment of the excitation, allow a minimum of 30 seconds for the Masterweigh to update its internal excitation reading before proceeding with calibration functions. The approximate value of the excitation voltage sensed by the Masterweigh is displayed in Menu 8. This should match the voltage sensed at terminals J9 pin 1 and 2. i (Allow 30 seconds for update of display after adjusting the excitation). Incorrect configuration of excitation sensing will cause erratic mass rate readings. The millivolt input accepts a differential millivolt signal, and will operate accurately over a common mode range of minus 8 to plus 8 volts. The input is overload protected to plus or minus 35 volts on either terminal with the Masterweigh energised, and plus or minus 20 volts on either terminal when not energised. Transient overload capacity is much higher than this continuous rating, and depends on the duration of the overload. The analogue to digital conversion is performed using voltage to frequency conversion techniques, thereby providing excellent rejection of signal noise over a wide frequency range. With the exception of short periods allocated to self-calibration, the Masterweigh is continuously monitoring the load cell input rather than periodically sampling, as is the case for systems which use dual-slope integrating converters. This results in a more accurate measurement of the rapidly fluctuating input signal from the load cell. Careful design of the input circuitry ensures excellent rejection of common-mode signals both AC and DC. Note: The excitation voltage regulators are overload and short-circuit protected, however, short circuiting of the excitation output will interfere with normal operation of analogue input circuitry and the RS232 interface.

CAUTION: Application of an external voltage source to the excitation terminals may cause serious damage to the Masterweigh.

No calibration or adjustment of the Masterweigh analogue inputs is required. Gain and zero are automatically adjusted by the reference. This automatic calibration is repeated once every 30 seconds, whenever the Masterweigh is energised. After energising the Masterweigh, always allow a minimum of thirty (30) seconds for this automatic calibration to be performed before initiating a span or zero calibration sequence. (Note: If Masterweigh has not been energised for some time, allow 3 minutes before initiating the above).

Tacho Input and Supply

Electrical Characteristics

The tacho input is designed to accept a voltage input of 2.5 to 50 volts peak and so will accept either a TTL or sinusoidal voltage input. The input threshold voltage is +1.2 volts at the positive input with respect to the negative input. The negative input is directly connected to the Masterweigh grounds. Avoid earthing this input in the field as it will create ground loops. The tacho input will not accept frequencies in excess of 800 Hz (approx.). A regulated +5 volt supply is provided for energising a digital pulse generator. This supply is rated at 200mA maximum, and is overload and short-circuit protected. It may be necessary to briefly remove all load after removing a short circuit in order to reset the protection circuit. Short-circuiting of the tacho +5 volt supply will not affect the Masterweigh CPU operation. Masterweigh is fitted with a potentiometer (RV2) to adjust the tachometer's 5V rail if required. (Normally only used when the tacho supply drops to a voltage where the tachometer ceases to work owing to significant voltage drop from long cable runs, IS barriers or the like.

CAUTION: Application of an external voltage source to the tacho supply terminals may cause damage to the Masterweigh.

Frequency Selection

The tacho generator should be selected and fitted to provide a frequency input to the Masterweigh within the range 5 to 1000 Hz, to ensure compatibility & accurate measurement. The tachometer is normally selected for the user by the factory. Selection depends on the rotational speed of the pick up pulley, which in turn is supplied by the user. Note that the tacho frequency has no affect on the rate at which the load cell signal is sampled.

Pulse Output

The Masterweigh provides a pulse output for external accumulation of the mass total. Masterweigh provides for three methods of indicating when a change in Masterweigh's total has occurred.

1) An Internally Generated + 5VDC Pulse
2) An Internally Generated + 24VDC Pulse
3) Contact closure from an internal relay

(providing voltage free contacts). Which of these options is used can be selected from links LK6 and LK7 as shown in the USER CONFIGURATION section. The pulse duration is adjustable in Menu 1. One pulse is output each time the least significant mass total digit displayed is incremented by 1 count. A minimum of 20 milliseconds is guaranteed between pulses, thereby providing a maximum pulse rate of 25 pulses per second (20 milliseconds on, plus 20 milliseconds off). The internal +5V supply is regulated to +5V. It is not isolated from ground. External load resistance should not be lower than 50 ohms. The internal +28V is unregulated and may vary over the range 25-35V. It is isolated from ground to allow configuration of a fully isolated pulse output. This +28V supply is shared with the 4-20mA analogue loop output, and is rated at 400mA continuous maximum current. The contact closure is completely isolated and is rated at 32V maximum and 500mA maximum. It must not be used for 110V or 240V operation. All pulse outputs are protected by 2 of 500mA fast blow fuses, F2 and F3.

Analogue Output

The Masterweigh provides one 4-20mA analogue output channel, with a resolution of better than 0.5%. It operates as a loop powered configuration and therefore derives its operating power from the 4mA residual loop current. A minimum of 20 volts is required to operate with zero ohms load, rising by 1 volt for every 50 ohms of load, ie. 30 volt
supply required for 500 ohm load. An isolated 24VDC regulated supply is provided on the Masterweigh power supply board, which can be used to energise the analogue loop. Links LK2 and LK3 on the bottom power supply board, select either the onboard supply or an external supply connected in series with the analogue loop. Span calibration of the output is readily performed by accessing the analogue calibration in the Menu 1 set up. There is no provision for zero adjustment on the analogue output.

Earthing

This is achieved by installing the shunt on LK1 (link) located on the lower pcb above the capacitors. Installing this link will connect the Masterweigh's digital and analogue grounds to power earth.

Display Backlighting

The liquid-crystal display used in the Masterweigh provides LED backlighting for improved readability under adverse light conditions. If the unmarked key has not been activated then the display will switch off if any key has not been used within 5 minutes.

System Output Status

A voltage free contact has been provided for remote monitoring of the Masterweigh autozero function. If the autozero function returns a value that is outside the "high and low" limits that were set in Menu 7, the relay will energise. It will remain energised until an operator initiated zero is performed in Menu 3.

Power Supply PCB (Lower Board)

LK1 Grounding

When the shunt is in position Masterweigh is referenced to ground. When open Masterweigh is floating.

LK2, LK3, LK3, LK4 Current loop supply

These links select the power supply for the analogue output current loop. The supply can be an internally generated isolated 24VDC supply, or an external supply of 20 to 50VDC.

Set the links to select the appropriate power source as follows:

Internally generated:

LK2 LK3
A A

Externally generated:

LK2 LK3
B B

LK6, LK7 Totaliser Pulse Output

These links select whether the totaliser relay is potential free or switches the internal 24Vdc.

Set the links to suit the external counter device.

Internally generated +24 VDC (Isolated):

LK6 LK7
A A

Voltage free contacts:

LK6 LK7
B B

Potentiometer Adjustments

Excitation Level Adjustment

Power Supply PCB (Bottom Board)

RV1: Used to adjust the load cell excitation used in conjunction with a digital meter.

RV2: Used to adjust the tachometer supply voltage. The voltage can be adjusted 5- 23V and is set to 5V at the factory. The voltage can be adjusted when there is a voltage drop at the tachometer due to long cables, or Intrinsic Safety Barriers are used. If a Proximity switch is used the voltage can be adjusted to the correct supply voltage.

Contrast & Analogue Output Adjustment

CPU PCB (Top Board)

VR1: Adjusts the LCD display viewing angle so that the display can be easily read.

VR2: Used to span the 4-20mA analogue output channel. Connect a digital current meter in series with the analogue output. Set the analogue output to 20mA (see Menu 1). Adjust the output using VR2 until the current meter shows 20.00

Field Terminal Strips

J3 – Power supply input

1)	A	240VAC/110VAC	Active
2)	N	240VAC/110VAC	Neutral
3)	E	240VAC/110VAC	Earth

J5 – System Status Relay

1)	COM	Common contact
2)	NO	Normally open contact
3)	NC	Normally closed contact

J6 – Pulse counter outputs

1) P+ Pulse Counter Output
2) P- Pulse Counter Output
3) SLD Screen

J7 – Auxiliary 24V DC output

1)	GND	24V ground
2)	24V	24V

J8 – Tachometer inputs

1)	TG	Tacho Ground
2)	TIN	Tacho Signal In
3)	TE	Tacho supply +5V
4)	SLD	Screen

J9 – Load cell inputs

1)	L+	Load cell signal output +ve
2)	L-	Load cell signal output -ve
3)	E+	Load cell excitation +ve
4)	E-	Load cell excitation -ve
5)	SLD	Load cell Shield

J10 – Analogue Rate output

1)	-	Analogue output -ve
2)	+	Analogue output +ve
3)	SLD	Screen

Fieldbus – Profibus

The Profibus card for MW6 functions as a Profibus DP-V0 slave. The card also has a standard RS232 interface to transmit data to a printer or a computer. Data on the Profibus interface is exchanged as cyclical I/O. The interface supports all the standard baud rates up to 12Mbps. The Profibus interface supports DP features such as Freeze mode, Sync mode, Auto baud detection and Set slave address.

Connectors:

J2 is the standard MW6 RS232 interface used to transmit ASCII data to a computer or other device such as a printer.
J3 is an RS232 interface which provides an easy way to monitor and access parameters on the Profibus interface.
J4 is the Profibus interface connector and is a standard DB9 connector which is the preferred and most commonly used connector. There are no terminating or biasing resistors on the interface and it is suggested that standard Profibus connectors containing both terminating and biasing resistors are used.
Link LK1 switches the RXD pin between the Profibus module and the normal RS232 communications see FIG 1C below

Status Indicators:

D1 shows activity on the TX line of the standard RS232 interface.

D2 shows activity on the RX line of the standard RS232 interface.

D3 indicates the 5V supply is on.

	STATUS	DESCRIPTION
D4	Off	Off-line or no power
	On	Data Exchange mode
	Flashing	Clear mode

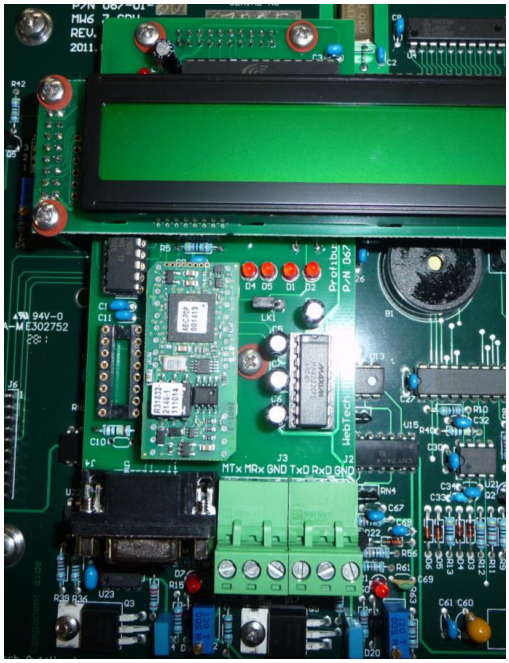

MW6 with Profibus Card Installed

Node Address:

MENU 14

Profibus address = 1

Press ENTER

Enter new address here.

Press ENTER

Baud rate is auto detect

DB9F Pinout
The Pinouts for the Profibus connector are as below:

Profibus Connector (DB9F)	
Pin	Singal
1	
2	
3	B-Line
4	RTS
5	GND BUS (isolated)
6	+5V BUS (output, isolated, 100mA max)
7	
8	A-Line
9	
Housing	Shield

The +5V BUS and GND BUS are supplied by the Profibus module, and are normally used for the RS485 bus biasing resistors.

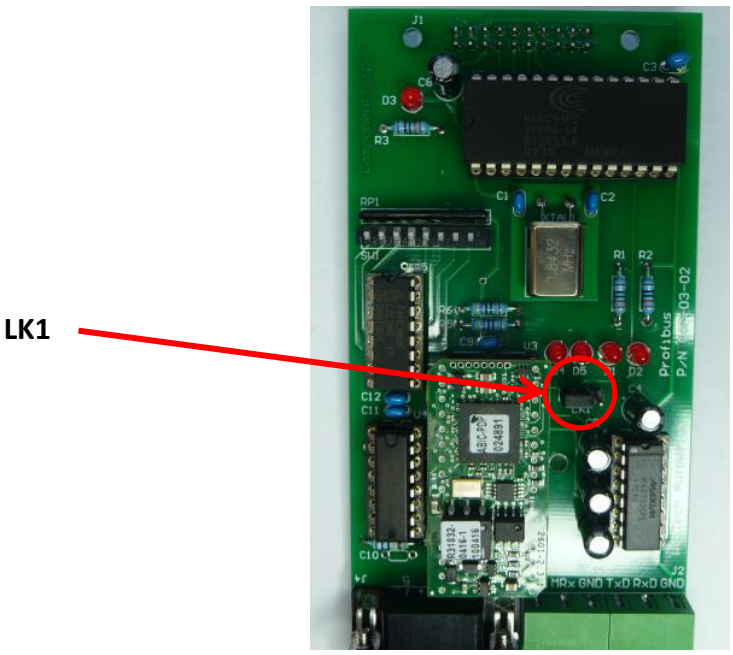

Masterweigh 6 Profibus Interface

Variable Data Format

All 32-bit variables (floating-point and unsigned long) are stored in a six byte format to allow for data using two different byte orders. If the variable is expected to be encoded with a byte order from bytes 0-3, four bytes should be read starting at offset 0 of the six byte block. If the byte order is expected to have the two 16-bit words reversed, four bytes should be read starting from offset 2 of the six byte block.

0	1	2	3	4	5
Byte 0	Byte 1	Byte 2	Byte 3	Byte 0	Byte 1

Profibus Module Data

The data provided by the Profibus interface is sent as a 42-byte block containing the following seven variables in order:

Variable	Code	Type
Mass Rate	MR	IEEE float
Mass Total	MT	DWORD (32-bits)
Load Cell	LC	IEEE float
Tacho Frequency	TF	IEEE float
Belt Speed	BS	IEEE float
Load cell zero	LZ	IEEE float
Load cell span	LS	IEEE float

As each variable is stored in the six-byte format, the 42-byte block is encoded as follows:

0	1	2	3	4	5	6	7
MR0	MR1	MR2	MR3	MR0	MR1	MT0	MT1

8	9	10	11	12	13	14	15
MT2	MT3	MT0	MT1	LC0	LC1	LC2	LC3

16	17	18	19	20	21	22	23
LC0	LC1	TF0	TF1	TF2	TF3	TF0	TF1

24	25	26	27	28	29	30	31
BS0	BS1	BS2	BS3	BS0	BS1	LZ0	LZ1

32	33	34	35	36	37	38	39
LZ2	LZ3	LZ0	LZ1	LS0	LS1	LS2	LS3

40	41
LS0	LS1

Connectors:

J2 is the standard MW6 RS232 interface used to transmit ASCII data to a computer or other device such as a printer.

J3 is an RS232 interface which provides an easy way to monitor and access parameters on the Ethernet interface.

J4 is the Ethernet interface connector and is a standard CAT5E connector which is the preferred and most commonly used connector.

Link LK1 switches the RXD pin between the Ethernet module and the normal RS232 communications

Status Indicators:

D1 shows activity on the TX line of the standard RS232 interface.

D2 shows activity on the RX line of the standard RS232 interface.

D3 indicates the 5V supply is on.

D4-7 are as shown in below:

LED	State	Status
D4	Off	No power or no IP address
	Green	EtherNet/IP connection/s established
	Green, Flashing	No EtherNet/IP connection/s established
	Red	Duplicate IP address detected
	Red, Flashing	One or several EtherNet/IP connections has timed out
	Alternating Red/Green	Self test in progress
D5	Off	Device not powered
	Green	Device has an Ethernet/ip connection
	Green, Flashing	Device has no Ethernet/ip connection
	Red	Major fault (unrecoverable)
	Red, Flashing	Minor fault (recoverable)
	Alternating Red/Green	Self test in progress
D6	Off	10 Mbps
	Green	100 Mbps
	Alternating Red/Green	Self test in progress
D7	Off	Device not powered
	Green	Module connected to an Ethernet network
	Green, Flashing	RX / TX Activity
	Alternating Red/Green	Self test in progress

Setup in MW6 Menu:

1) Select menu 14 in the Masterweigh 6 setup menu, and press enter to configure the Modbus TCP interface.
2) Configure the system using the following settings:

Setting	Value
DHCP Enabled	0
IP Address	010000000025 (Four 3 digit numbers 010.000.000.025)
Subnet Mask	255255255000 (Four 3 digit numbers 255.255.255.000)
Gateway	010000000138 (Four 3 digit numbers 010.000.000.138)

To setup the interface, the device's IP address, subnet mask and gateway will have to be configured. This can be entered statically, or received dynamically using DHCP. After entering menu 14, the user can first configure DHCP by entering 1 for enabled or 0 for disabled.

If the user selects 1, the configuration is completed and the user can exit the menu to save changes.

If the user selects 0, they will then be prompted to enter the IP address, subnet mask and gateway. These values need to be entered in a 12-digit format (AAABBBCCCDDD) where, for example, the IP address 192.168.0.1 is entered as 192168000001. After these values are entered, the user can exit the menu to save changes.

Address	Variable	Type
Base + 0	High Value	IEEE float/DWORD
Base + 1	Low Value	IEEE float/DWORD
Base + 2	High Value	IEEE float/DWORD

Masterweigh 6 Modbus TCP Interface

Variable Data Format

All 32-bit variables (floating-point and unsigned long) are stored in a six byte format using three consecutive registers to allow for data using two different byte orders. If the variable is expected to be encoded with a byte order from bytes 0-3, two registers should be read starting from the base register. If the byte order is expected to have the two 16-bit words reversed, two registers should be read starting from register offset 1.

Modbus TCP Data

The registers provided by the Modbus TCP interface can be seen to the left:

Address	Variable	Type
1	Mass Rate High	IEEE float
2	Mass Rate Low	IEEE float
3	Mass Rate High	IEEE float
4	Mass Total High	DWORD (32 bits)
5	Mass Total Low	DWORD (32 bits)
6	Mass Total High	DWORD (32 bits)
7	Load Cell High	IEEE float
8	Load Cell Low	IEEE float
9	Load Cell High	IEEE float
10	Tacho Freq. High	IEEE float
11	Tacho Freq. Low	IEEE float
12	Tacho Freq. High	IEEE float
13	Belt Speed High	IEEE float
14	Belt Speed Low	IEEE float
15	Belt Speed High	IEEE float
16	Load Cell Zero High	IEEE float
17	Load Cell Zero Low	IEEE float
18	Load Cell Zero High	IEEE float
19	Load Cell Span High	IEEE float
20	Load Cell Span Low	IEEE float
21	Load Cell Span High	IEEE float

Pin outs:

The pin-outs for the DeviceNet connector are shown in the figure below.

DeviceNet Connector	
Pin	**Signal**
1	V-
2	CAN L
3	Shield
4	CAN H
5	GND BUS (isolated)
6	V+

You must ensure that 120Ohm 0.5W termination resistors are installed between CAN HI and CAN LO at the two ends of the DeviceNet network.

MW6 DeviceNet:

The DeviceNet card for MW6 functions as a DEV-V0 slave. The card also has a standard RS232 interface to transmit data to a printer or a computer.

Data on the DeviceNet interface is exchanged as cyclical I/O. The interface supports all the standard baud rates up to 12Mbps. The

DeviceNet interface supports DP features such as Freeze mode, Sync mode, Auto baud detection and Set slave address.

Connectors

J2 is the standard MW6 RS232 interface used to transmit ASCII data to a computer or other device such as a printer.

J3 is an RS232 interface which provides an easy way to monitor and access parameters on the DeviceNet interface.

J4 is the DeviceNet interface connector

Link LK1 switches the RXD pin between the Profibus module and the normal RS232 communications.

MW6 DeviceNet Setup:

Node Address

MENU 14

DeviceNet address = 1

Press ENTER

Enter new address here.

Press ENTER

Baud rate is auto detect

Status Indicators:
D1 shows activity on the TX line of the standard RS232 interface.
D2 shows activity on the RX line of the standard RS232 interface.
D3 indicates the 5V supply is on.

	STATUS	DESCRIPTION
Module Status D5	Off	Off-line or no power
	On	Data exchange mode
	Flashing	Auto Baud in progress
Network Status D7	Off	Off-line
	On	Online – Connected
	Flashing	Online – Not Connected

Masterweigh 6 DeviceNet Interface

Variable Data Format
All 32-bit variables (floating-point and unsigned long) are stored in a six byte format to allow for data using two different byte orders. If the variable is expected to be encoded with a byte order from bytes 0-3, four bytes should be read starting at offset 0 of the six byte block. If the byte order is expected to have the two 16-bit words reversed, four bytes should be read starting from offset 2 of the six byte block.

0	1	2	3	4	5
Byte 0	Byte 1	Byte 2	Byte 3	Byte 0	Byte 1

DeviceNet Data
The data provided by the DeviceNet interface is sent as a 42-byte block containing the following seven variables in order:

Variable	Code	Type
Mass Rate	MR	IEEE float
Mass Total	MT	DWORD (32-bits)
Load Cell	LC	IEEE float
Tacho Frequency	TF	IEEE float
Belt Speed	BS	IEEE float
Load cell zero	LZ	IEEE float
Load cell span	LS	IEEE float

As each variable is stored in the six-byte format, the 42-byte block is encoded as follows:

0	1	2	3	4	5	6	7
MR 0	MR 1	MR 2	MR 3	MR 0	MR 1	MT 0	MT 1

8	9	10	11	12	13	14	15
MT 2	MT 3	MT 0	MT 1	LC 0	LC 1	LC 2	LC 3

16	17	18	19	20	21	22	23
LC 0	LC 1	TF 0	TF 1	TF 2	TF 3	TF 0	TF 1

24	25	26	27	28	29	30	31
BS 0	BS 1	BS 2	BS 3	BS 0	BS 1	LZ 0	LZ 1

32	33	34	35	36	37	38	39
LZ 2	LZ 3	LZ 0	LZ 1	LS 0	LS 1	LS 2	LS 3

40	41
LS 0	LS 1

Zero Calibration

1) Acquire correct Calibration Data Sheet and Design Data Sheet for belt scale/feeder.
2) Allow conveyor/feeder to run for at least ½ hr prior to calibration.
3) Remove feed from conveyor/feeder.
4) Press 'MENU' key.
5) Press '3' (or '+' key 2 times) to get to menu 3 "Zero Calibration". There will be 2 values displayed. 1st is "Zero Cal = xx.xxxmV the 2nd value is xx.xxxmV Ztrck.
6) Record BOTH values for future reference.
7) Press '8' key (or + key 5 times). This will bring you to MENU 8 "Loadcell Input".
8) Check that loadcell voltage is close to that last recorded in the calibration data sheet "DYNAMIC (No Load)" mV, and is relatively stable.
9) Press '9' key (or + key 1 time). This will bring you to MENU 9 "Tacho Frequency".
10) Check that the frequency displayed is close to that last recorded in the Calibration Data Sheet, and is relatively stable.
11) Press "Menu" key, then press "Abort" key. Masterweigh should return to the normal operating display.
12) With the belt running empty, press the "ZERO" key.
13) The display should read "To Start Zero Cal Press E".
14) Press "E". The belt should complete a full number of revolutions as indicated on the Calibration Data Sheet ('Menu 2' No of Belt revs:) Watch conveyor to ensure no product flows over the weigher and nothing is fouling the weigh frame while the calibration takes place.
15) When the calibration is complete, the display will read "To calculate new calibration press E" "MASS TOTAL = xx.xxx." Where xx.xxx is the actual number of tonnes the belt scale/feeder has weighed during the calibration.
16) If the Mass Total value is < ±0.2% of capacity, Press "A", Masterweigh will return to the normal operating display and Zero calibration is complete! If not press "E".
17) The display will now read "Zero Error = xx.xxxmV Press E to save Otherwise press A". (This value should be close to those recorded in step 7). Record this value & press "E". The Masterweigh will return to the normal operating display.
18) Steps 14 through to 19 should be repeated until the value in step 19 is < ±0.2% of capacity.
19) If the zero calibration is changed, the new value should be recorded and the Calibration Data sheet updated.

Span Calibration

1) Acquire correct Calibration Data Sheet and Design Data Sheet for belt scale/feeder.
2) Allow conveyor/feeder to run for at least 20 minutes prior to calibration.
3) Remove feed from conveyor/feeder.
4) Perform Zero calibration before span calibration is attempted.
5) Ensure correct amount of calibration weight is used. (Design Data Sheet)
6) With the conveyor/feeder running empty, apply calibration weights.
7) Press 'MENU' key.
8) Press '4' key (or + key 3 times). This will bring you to menu 4 "Fixed Weight Calibrate Span".
9) Check that the Span value is the same as that last recorded in the calibration data sheet.
10) Press 'E' key 3 times. The display will read "Target weight = XX.XXXt". Check that this value is the same as that last recorded in the Calibration data sheet Target Weight.
11) Press 'A' key. This will return to start of menu 4.
12) Press '8' key (or + key 4 times). This will bring you to MENU 8 "Loadcell Input".
13) Check that loadcell voltage is close to that last recorded in the calibration data sheet "DYNAMIC (With Weights)" mV, and is relatively stable.
14) Press '9' key (or + key 1 time). This will bring you to MENU 9 "Tacho Frequency".
15) Check that the frequency displayed is close to that last recorded in the Calibration Data Sheet, and is relatively stable.
16) Press "Menu" key, then press "Abort" key. Masterweigh will return to the normal operating display.
17) With the feeder running empty, and calibration weights in place, press the "CAL" key.
18) The display should read "To Start Span Calibration Press E".
19) Press "E". The belt should complete a full number of revolutions as indicated on the Calibration Data Sheet ('Menu 2' No of Belt revs:). Watch feeder to ensure no product flows over the weigher and nothing is fouling the weigh area while the calibration takes place.
20) When the calibration is complete, the display will read "To calculate new calibration press E" "MASS TOTAL = xx.xxx." Where xx.xxx is the actual number of kg the scale/feeder has weighed during the calibration.
21) The Mass Total value should be close to the target weight. If it is < ± 0.5%. Press "A", Masterweigh will return to the normal operating display and the Span calibration is complete! If not press "E".
22) The display will now read "New Span Factor = xx.xxx Press E to save Otherwise press A". (The span value should not change by more than around ±1%. If the span change is greater than ±1%, Abort the calibration & check the feeder for mechanical problems / changes). If the span change is within ±1%, record the new value & press "E". The masterweigh will return to the normal operating display.
23) Steps 19 through to 24 should be repeated until the value in step 24 is < ± 0.5% of the Target Weight.
24) If the span value is changed, the final value should be recorded and the Calibration Data sheet updated.

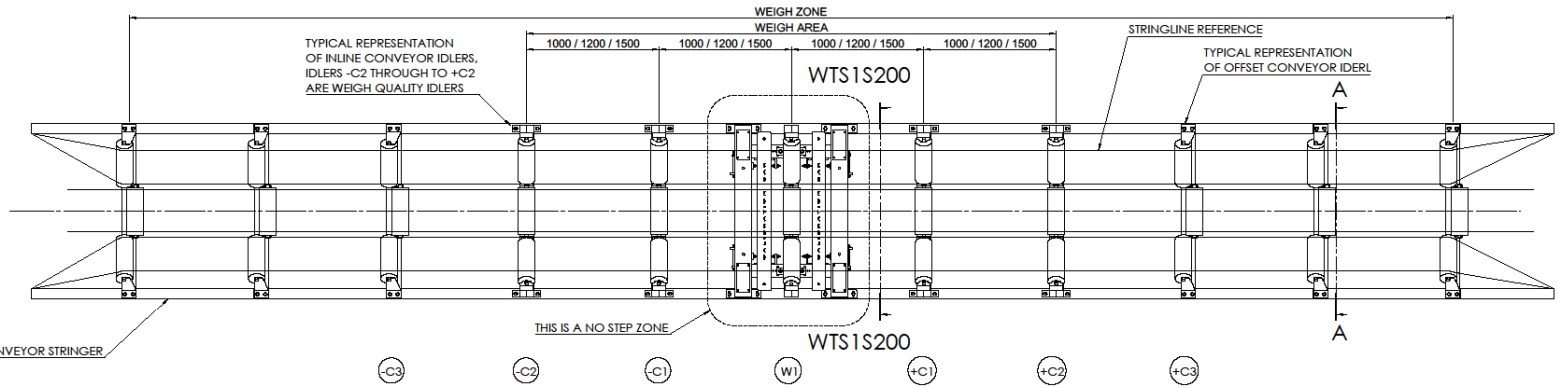

PLAN VIEW

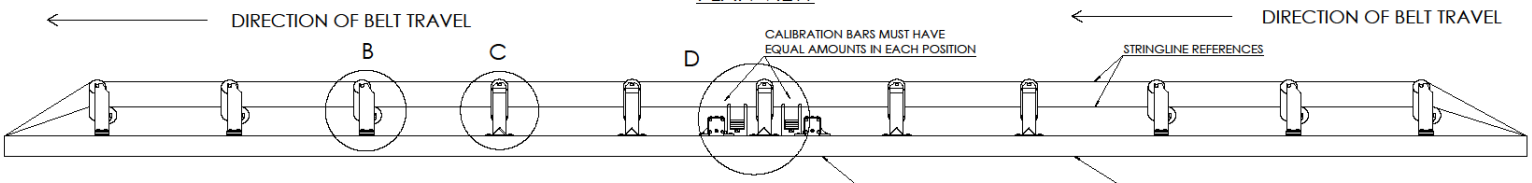

SIDE VIEW

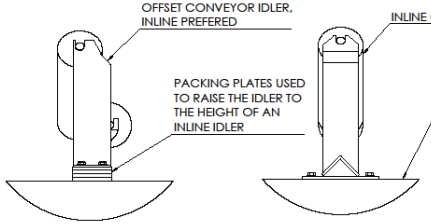

DETAIL B
SCALE 1 : 7.5

DETAIL C
SCALE 1 : 7.5

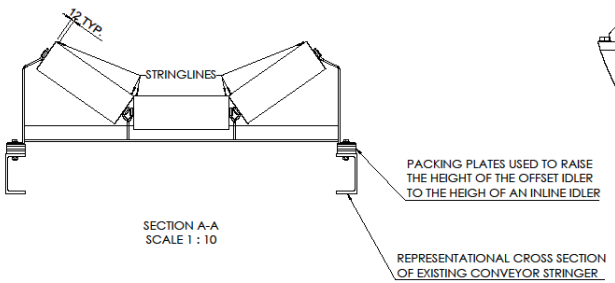

SECTION A-A
SCALE 1 : 10

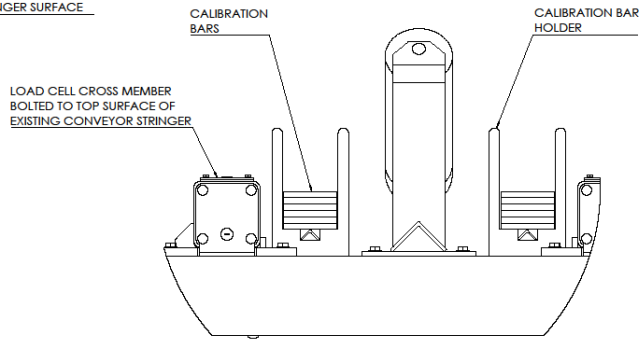

DETAIL D
SCALE 1 : 5

NOTES

1. CONVEYOR IDLERS FROM +C2 THRU TO -C2 (WEIGH QUALITY, 5 OFF) MUST BE INLINE IDLERS, NOT OFFSET IDLERS
2. CONVEYOR IDLERS FROM +C3 THRU TO -C3 MUST BE MOUNTED AT RIGHT ANGLES TO THE DIRECTION OF BELT CENTRELINE, DIMENSIONS SHOWN BETWEEN IDLERS MUST BE MAINTAINED TO A TOLERANCE OF ±0.5mm
3. IGNORE THIS NOTE IF INLINE IDLERS ARE SOLEY USED GENERALLY IDLER HEIGHTS FOR OFFSET IDLERS IS LESS THAN THOSE FOR INLINE IDLERS. PACKERS MAY BE USED TO RAISE OFFSET IDLERS TO THE HEIGHT OF INLINE IDLERS. (REFER TO DETAIL B) AS A RULE, A 3.0mm GRADIENT PER METRE IS AN ALLOWABLE TOLERANCE HEIGHT BETWEEN ROLL HEIGHTS
4. ROLLS +C2 THRU TO -C2, INCLUDING W2 THRU TO W1 ARE TO BE DRILLED AND TAPPED M8, (15 ROLLS IN TOTAL). REFER DETAIL A.
5. PRIOR TO ALIGNING IDLERS, LOSSEN OFF THE TRANSIT / SHIPPING BOLTS AND REMOVE TRANSIT PACKERS, REFER TO DRAWING WTS1S200 FOR THEIR LOCATION
6. ALL ROLLS MUST BE ADJUSTED TO STRINGLINE REFERENCE TO A TOLERANCE OF ±0.4mm, -0.0mm. LEVEL CENTRE ROLLS ON +C2 AND -C2 IDLERS PRIOR TO ANY ADJUSTMENTS. ENSURE ALL LOCKING NUTS BE TIGHTENED AFTER ADJUSTMENTS ARE COMPLETED

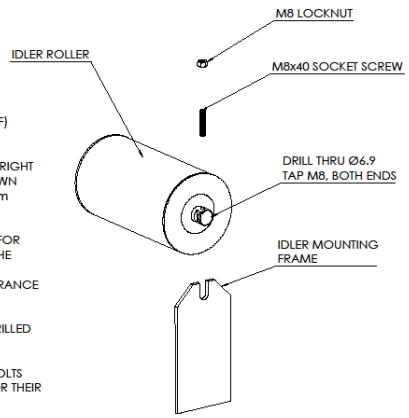

DETAIL A
SCALE 1:4

REVISIONS		
A. 04/11/98 ISSUED FOR APPROVAL	B. ROBINSON	
B: 03/06/16 CONVERTED TO SOLIDWORKS REARRANGED DRAWINGS	B.ROBINSON	
C. 16/01/17 CORRECTED DIRECTION OF BELT TRAVEL	B.ROBINSON	

UNLESS OTHERWISE STATED UNTOLERANCED DIMENSIONS TO BE WITHIN THE LIMITS SHOWN

NOMINAL SIZE	UP TO 30	ABOVE 30 UP TO 150	ABOVE 150 UP TO 300	ABOVE 300 UP TO 1000	ABOVE 1000
MACHENING	± 0.1	± 0.2	± 0.3	± 0.5	± 1.0
FABRICATION	± 0.5	± 0.5	± 0.5	± 1.0	± 2.0
ASSEMBLIES	± 0.5	± 0.5	± 0.5	± 1.0	± 2.0

DRAWN	T.BERNADE
CHECKED	
APPROVED	
DATE APP'D	
SCALE	1:20
	DO NOT SCALE IF IN DOUBT ASK

WEB-TECH AUSTRALIA PTY. LTD.
A.C.N. 010 764 431
11 ELECTRONICS STREET EIGHT MILE PLAINS, QUEENSLAND, 4113, AUSTRALIA
P.O. BOX 4306 EIGHT MILE PLAINS, QUEENSLAND, 4113, AUSTRALIA
Phone +61-7-3841 2844 Fax +61-7-3841 0805

TITLE
MODEL WTS1 SERIES II
FULLY FLOATING WEIGHFRAME
INSTALLATION GENERAL ARRANGEMENT

ALL DIMENSIONS IN MILLIMETRES UNLESS OTHERWISE SPECIFIED

This drawing and any information or descriptive matter set out hereon are the confidential and copyright property of WEB-TECH AUSTRALIA PTY. LTD. and must not be disclosed, loaned, copied or used for manufacturing / tendering or for any other purpose without their written permission.

SIZE	DRAWING No.	
A1	NUMBER WTS1S210	REV. C
	CUSTOMER	
	PROJECT	
	CAD FILE WTS1S210 - Installation General Arrangement	

BELT WIDTH	A	G
500 mm	750mm	404mm
600 mm (24")	850mm	504mm
650 mm	900mm	554mm
750 mm (30")	1000mm	654mm
800 mm	1050mm	704mm
900 mm (36")	1150mm	804mm
1000 mm	1250mm	904mm
1050 mm (42")	1300mm	954mm
1200 mm (48")	1450mm	1104mm
1350 mm (54")	1650mm	1254mm
1400 mm	1700mm	1304mm
1500 mm (60")	1800mm	1404mm
1600 mm	2000mm	1504mm
1800 mm (72")	2200mm	1704mm
2000 mm	2400mm	1904mm
2200 mm	2600mm	2104mm

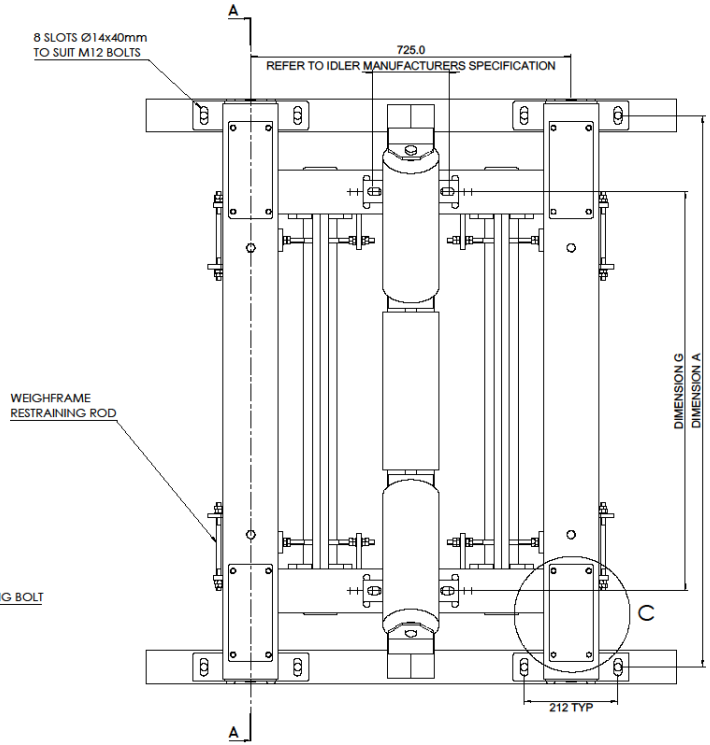

PLAN VIEW

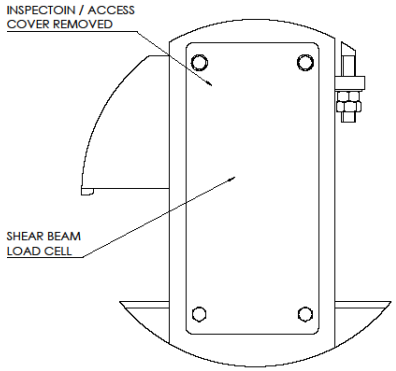

DETAIL C
SCALE 1 : 2

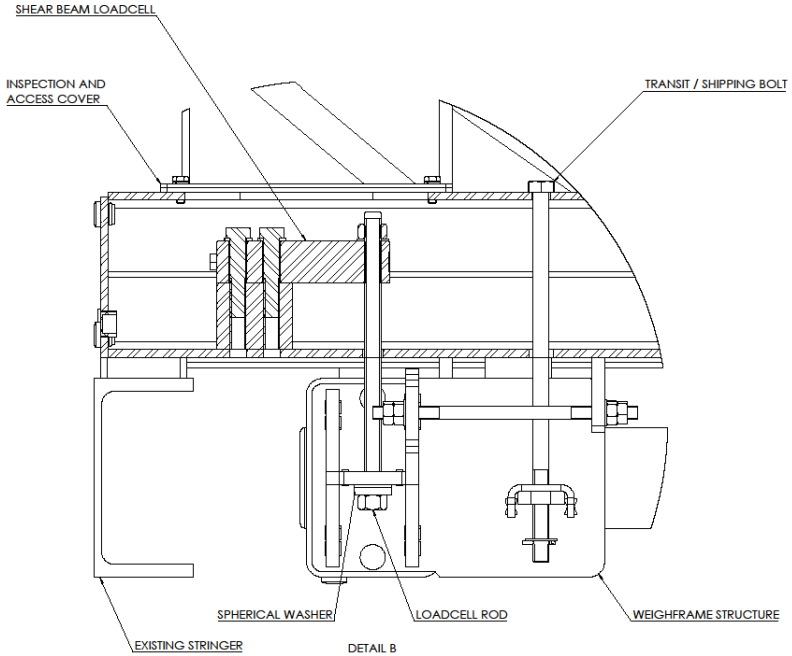

DETAIL B
SCALE 1 : 2

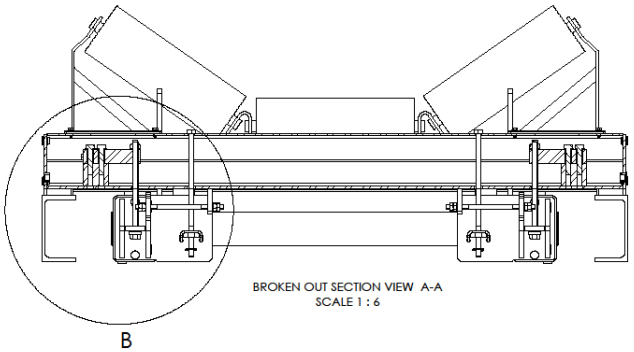

BROKEN OUT SECTION VIEW A-A
SCALE 1 : 6

REVISIONS

A: 03/09/01 ISSUED FOR APPROVAL

B: 12/11/02 T.BERNADI DIMENSIONS ADDED FOR WEIGH FRAME DEPTH ECN: 0000

C: 12/11/02 K.WEBSTER DIM G ADDED ECN: 0000

D: 02/06/16 B.ROBINSON CONVERTED TO SOLIDWORKS DRAWING STANDARD. NOW 4 LOAD CELL CONFIG

UNLESS OTHERWISE STATED UNTOLERANCED DIMENSIONS TO BE WITHIN THE LIMITS SHOWN						
NOMINAL SIZE	UP TO 30	ABOVE 30 UP TO 120	ABOVE 120 UP TO 300	ABOVE 300 UP TO 1000	ABOVE 1000	
MACHINING	± 0.1	± 0.2	± 0.3	± 0.5	± 1.0	
FABRICATION	± 0.5	± 0.5	± 0.5	± 1.0	± 2.0	
ASSEMBLIES	± 0.5	± 0.5	± 0.5	± 1.0	± 2.0	

DRAWN	T.BERNARDI
CHECKED	
APPROVED	
DATE APP'D	
SCALE	1:6

DO NOT SCALE IF IN DOUBT ASK

WEB-TECH AUSTRALIA PTY. LTD.
A.C.N. 010 784 481
11 ELECTRONICS STREET EIGHT MILE PLAINS, QUEENSLAND, 4113, AUSTRALIA
P.O. BOX 4006 EIGHT MILE PLAINS, QUEENSLAND, 4113, AUSTRALIA
Phone +61-7-3841 2844 Fax +61-7-3841 0555

TITLE
MODEL WTS1 SERIES II
FULLY FLOATING WEIGHFRAME WITH CALIBRATION BARS
INSTALLATION GENERAL ARRANGEMENT

ALL DIMENSIONS IN MILLIMETRES
UNLESS OTHERWISE SPECIFIED

This drawing and any information or descriptive matter set out hereon are the confidential and copyright property of WEB-TECH AUSTRALIA PTY. LTD. and must not be disclosed, loaned, copied or used for manufacturing / tendering or for any other purpose without their written permission. ©

SIZE A1

DRAWING No.
NUMBER WTS1S200
REV. D

CUSTOMER

PROJECT

CAD FILE
WTS1S200d - Model WTS1S2 Fully Floating Weighframe General Arrangement

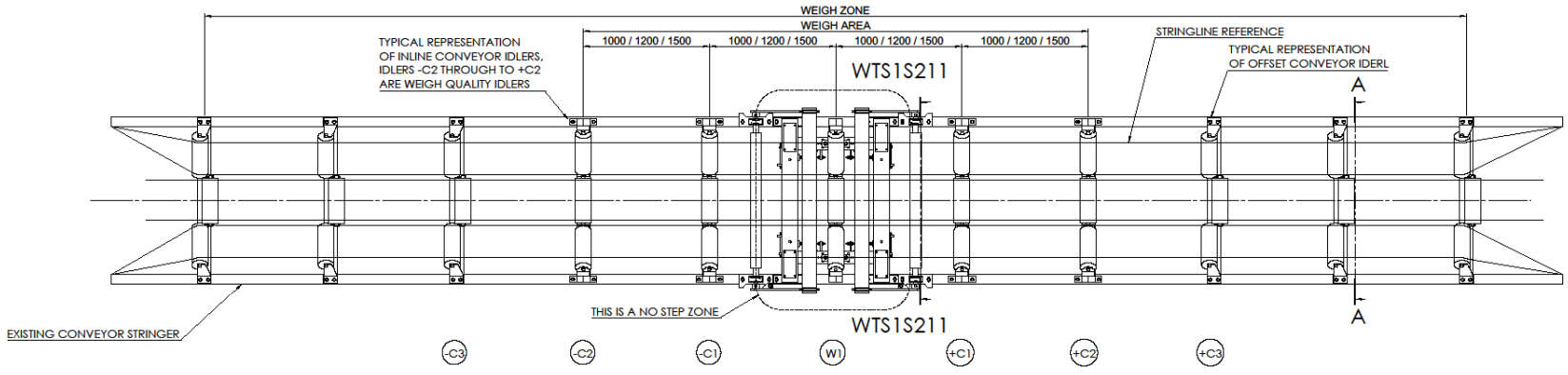

PLAN VIEW

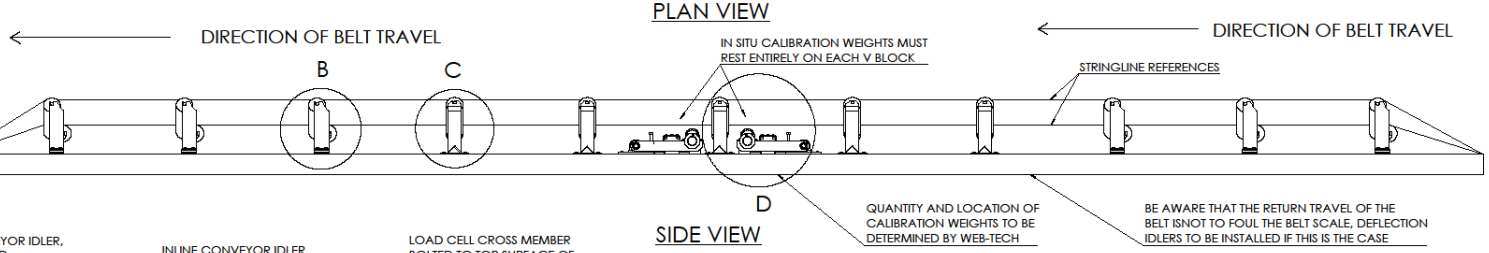

SIDE VIEW

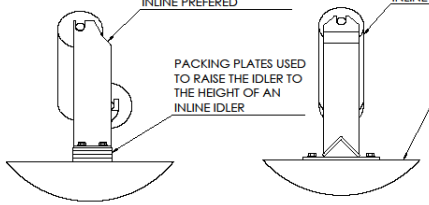

DETAIL B
SCALE 1 : 7.5

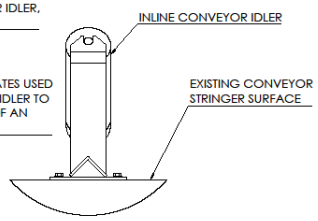

DETAIL C
SCALE 1 : 7.5

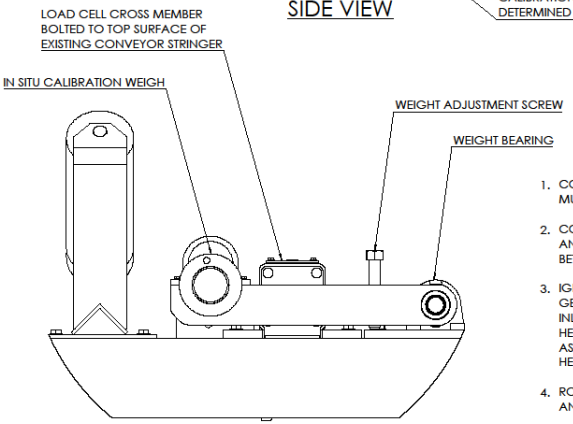

DETAIL D
SCALE 1 : 5

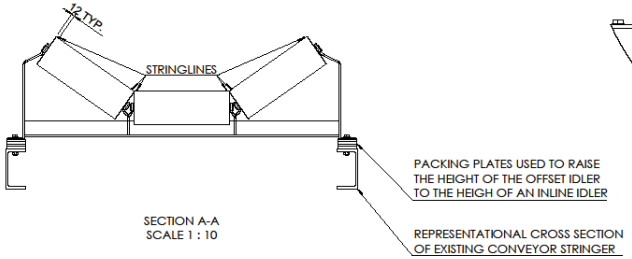

SECTION A-A
SCALE 1 : 10

NOTES

1. CONVEYOR IDLERS FROM +C2 THRU TO -C2 (WEIGH QUALITY, 5 OFF) MUST BE INLINE IDLERS, NOT OFFSET IDLERS
2. CONVEYOR IDLERS FROM +C3 THRU TO -C3 MUST BE MOUNTED AT RIGHT ANGLES TO THE DIRECTION OF BELT CENTRELINE, DIMENSIONS SHOWN BETWEEN IDLERS MUST BE MAINTAINED TO A TOLERANCE OF ±0.5mm
3. IGNORE THIS NOTE IF INLINE IDLERS ARE SOLEY USED
   GENERALLY IDLER HEIGHTS FOR OFFSET IDLERS IS LESS THAN THOSE FOR INLINE IDLERS. PACKERS MAY BE USED TO RAISE OFFSET IDLERS TO THE HEIGHT OF INLINE IDLERS. (REFER TO DETAIL B)
   AS A RULE, A 3.0mm GRADIENT PER METRE IS AN ALLOWABLE TOLERANCE HEIGHT BETWEEN ROLL HEIGHTS
4. ROLLS +C2 THRU TO -C2, INCLUDING W2 THRU TO W1 ARE TO BE DRILLED AND TAPPED M8, (15 ROLLS IN TOTAL). REFER DETAIL A.
5. PRIOR TO ALIGNING IDLERS, LOSSEN OFF THE TRANSIT / SHIPPING BOLTS AND REMOVE TRANSIT PACKERS, REFER TO DRAWING WTS1S200 FOR THEIR LOCATION
6. ALL ROLLS MUST BE ADJUSTED TO STRINGLINE REFERENCE TO A TOLERANCE OF ±0.4mm, -0.0mm. LEVEL CENTRE ROLLS ON +C2 AND -C2 IDLERS PRIOR TO ANY ADJUSTMENTS. ENSURE ALL LOCKING NUTS BE TIGHTENED AFTER ADJUSTMENTS ARE COMPLETED

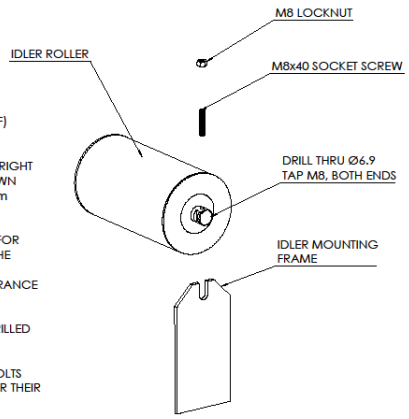

DETAIL A
SCALE 1:4

REVISIONS

A:-	08/06/16	B.ROBINSON ISSUED FOR APPROVAL
B:-	16/01/16	B.ROBINSON CORRECTED THE DIRECTION OF BELT TRAVEL

UNLESS OTHERWISE STATED UNTOLERANCED DIMENSIONS TO BE WITHIN THE LIMITS SHOWN

NOMINAL SIZE	UP TO 50	ABOVE 50 UP TO 150	ABOVE 150 UP TO 500	ABOVE 500 UP TO 1000	ABOVE 1000
MACHINING	± 0.1	± 0.2	± 0.3	± 0.5	± 1.0
FABRICATION	± 0.5	± 0.5	± 0.5	± 1.0	± 2.0
ASSEMBLIES	± 0.5	± 0.5	± 0.5	± 1.0	± 2.0

DRAWN	B.ROBINSON
CHECKED	
APPROVED	
DATE APP'D	
SCALE	1:20

DO NOT SCALE
IF IN DOUBT
ASK

WEB-TECH AUSTRALIA PTY. LTD.
A.C.N. 010 764 451
11 ELECTRONICS STREET EIGHT MILE PLAINS, QUEENSLAND, 4113, AUSTRALIA
P.O. BOX 4006 EIGHT MILE PLAINS, QUEENSLAND, 4113, AUSTRALIA
Phone +61-7-3841 2844 Fax +61-7-3841 0005

TITLE
MODEL WTS1 SERIES II
FULLY FLOATING WEIGHFRAME WITH IN SITU CALIBRATION WEIGHTS
INSTALLATION GENERAL ARRANGEMENT

ALL DIMENSIONS IN MILLIMETRES
UNLESS OTHERWISE SPECIFIED

This drawing and any information or description matter set out hereon are the confidential and copyright property of WEB-TECH AUSTRALIA PTY. LTD. and must not be disclosed, loaned, copied or used for manufacturing / tendering or for any other purpose without their written permission.

SIZE	DRAWING No.	
A1	NUMBER WTS1S212	REV. B

CUSTOMER

PROJECT

CAD FILE
WTS1S212b - Installation General Arrangement

BELT WIDTH	A	G
500 mm	750mm	404mm
600 mm (24")	850mm	504mm
650 mm	900mm	554mm
750 mm (30")	1000mm	654mm
800 mm	1050mm	704mm
900 mm (36")	1150mm	804mm
1000 mm	1250mm	904mm
1050 mm (42")	1300mm	954mm
1200 mm (48")	1450mm	1104mm
1350 mm (54")	1650mm	1254mm
1400 mm	1700mm	1304mm
1500 mm (60")	1800mm	1404mm
1600 mm	2000mm	1504mm
1800 mm (72")	2200mm	1704mm
2000 mm	2400mm	1904mm
2200 mm	2600mm	2104mm

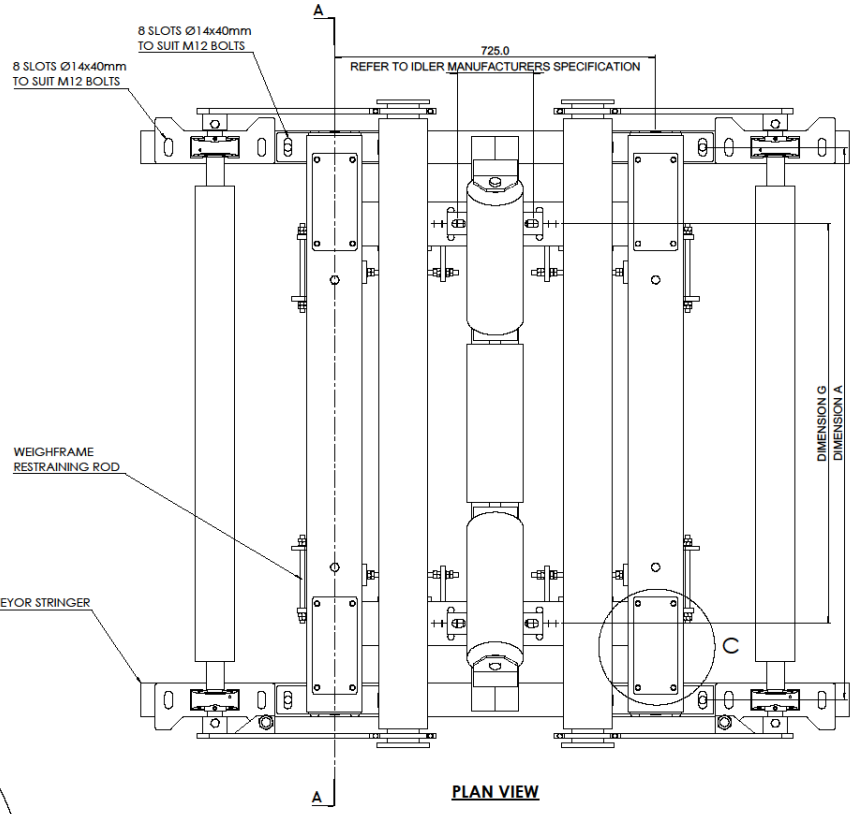

PLAN VIEW

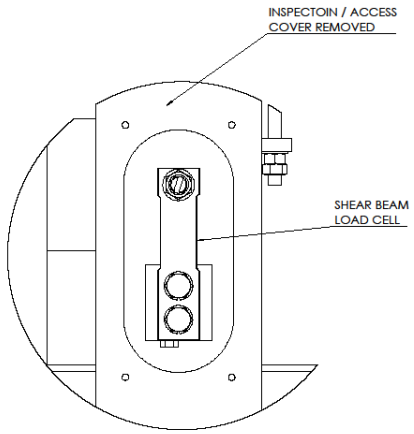

DETAIL C
SCALE 1 : 2

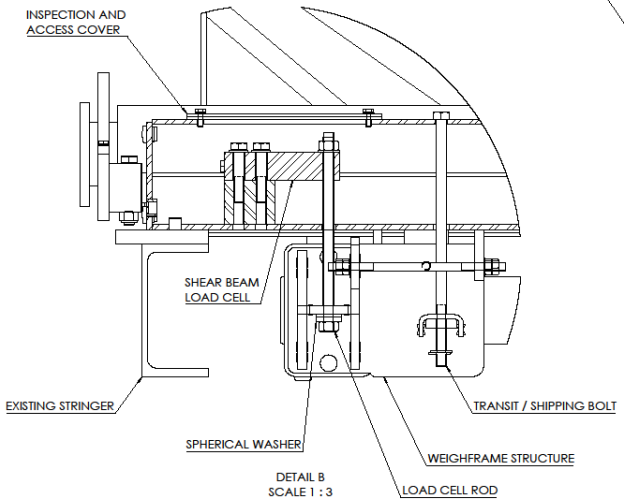

DETAIL B
SCALE 1 : 3

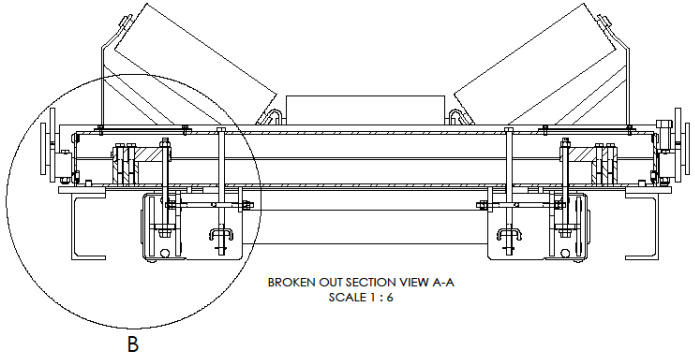

BROKEN OUT SECTION VIEW A-A
SCALE 1 : 6

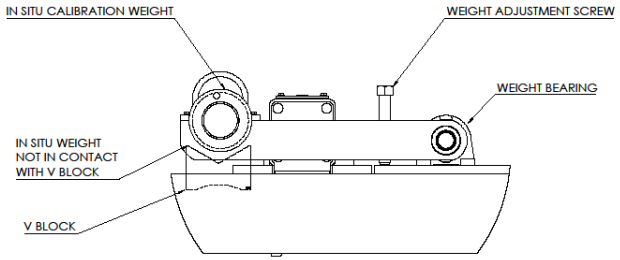

DETAIL D
IN SITU WEIGHTS SHOWN IN BELT SCALE OPERATION MODE
SCALE 1 : 5

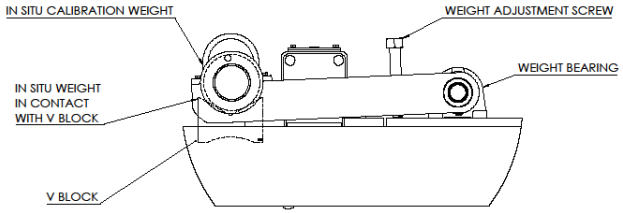

DETAIL E
IN SITU WEIGHTS SHOWN IN BELT SCALE CALIBRATION MODE
SCALE 1 : 5

REVISIONS

A:	08/06/2016	B.ROBINSON
	ISSUED FOR APPROVAL	

UNLESS OTHERWISE STATED
UNTOLERANCED DIMENSIONS
TO BE WITHIN THE LIMITS SHOWN

NOMINAL SIZE	UP TO 30	ABOVE 30 UP TO 120	ABOVE 120 UP TO 500	ABOVE 500 UP TO 1000	ABOVE 1000
MACHINING	± 0.1	± 0.2	± 0.3	± 0.5	± 1.0
FABRICATION	± 0.5	± 0.5	± 0.5	± 1.0	± 2.0
ASSEMBLIES	± 0.5	± 0.5	± 0.5	± 1.0	± 2.0

DRAWN	B.ROBINSON
CHECKED	
APPROVED	
DATE APP'D	
SCALE	1:6

DO NOT SCALE
IF IN DOUBT
ASK

WEB-TECH AUSTRALIA PTY. LTD.
A.C.N. 010 764 431
11 ELECTRONICS STREET EIGHT MILE PLAINS, QUEENSLAND, 4113, AUSTRALIA
P.O. BOX 4006 EIGHT MILE PLAINS, QUEENSLAND, 4113, AUSTRALIA
Phone +61-7-3841 2844 Fax +61-7-3841 0006

TITLE
MODEL WTS1 SERIES II
FULLY FLOATING WEIGHFRAME WITH INSITU CALIBRATION WEIGHTS
INSTALLATION GENERAL ARRANGEMENT

ALL DIMENSIONS IN MILLIMETRES
UNLESS OTHERWISE SPECIFIED

This drawing and any information or descriptive matter set out herein are the confidential and copyright property of WEB-TECH AUSTRALIA PTY. LTD. and must not be disclosed, loaned, copied or used for manufacturing / tendering or for any other purpose without their written permission.

SIZE	DRAWING No.	
A1	NUMBER WTS1S211	REV. A

CUSTOMER

PROJECT

CAD FILE
WTS1S211a - Model WTS1S2 Fully Floating Weighframe General Arrangement Instlla

Appendix B – Wiring Diagrams

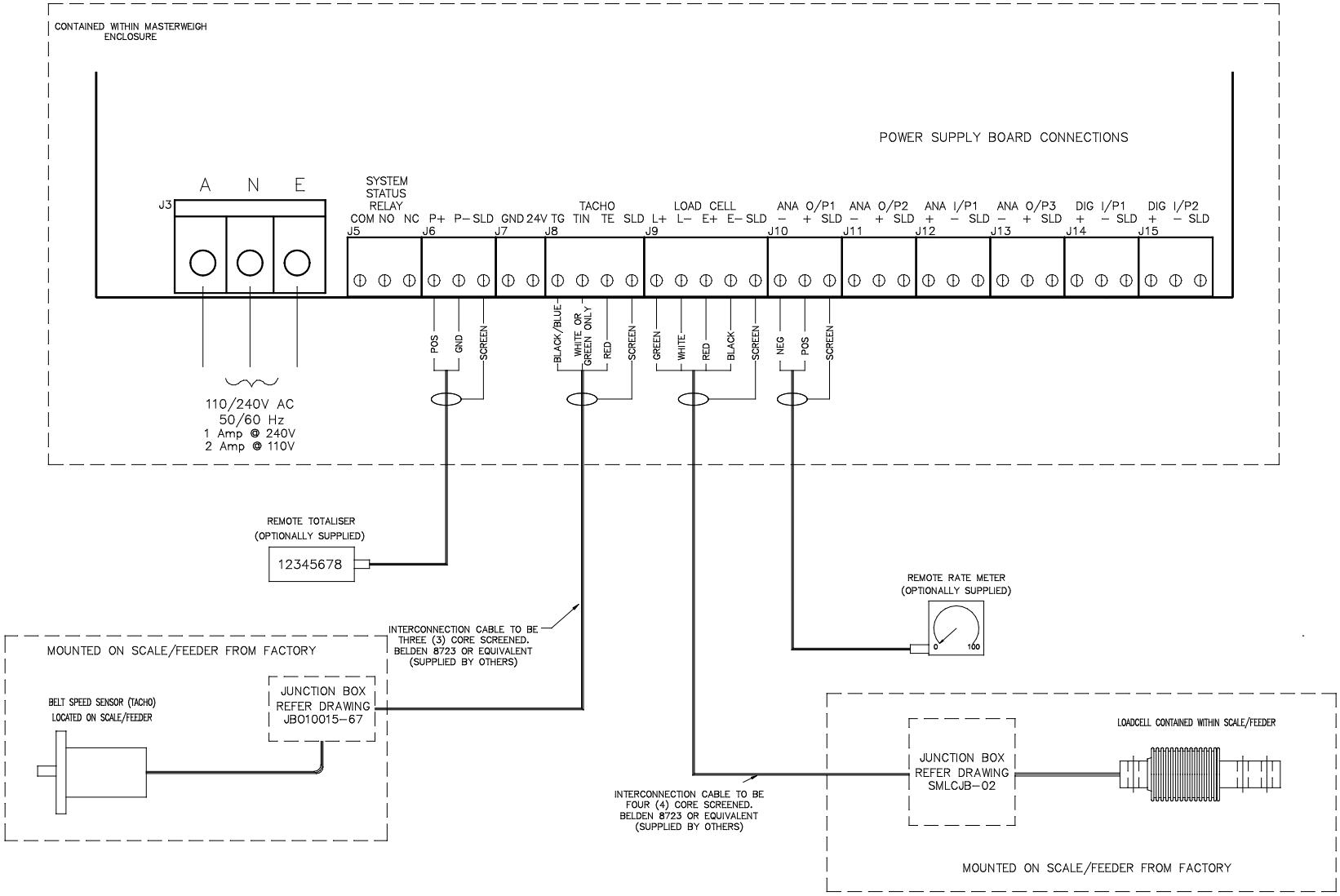

REVISIONS

A: 16/08/2011 ORIGINAL ISSUE

B: 10/02/15 ADJUSTED REFERENCE DRAWINGS JR

CERTIFICATION

WEB-TECH AUSTRALIA PTY. LTD. CUSTOMER No.:

CUSTOMER CUSTOMER ORDER No.:

- ☐ RETURN OF APPROVAL NOT REQUIRED
- ☐ RETURN APPROVAL FOR RECORD
- ☐ BEFORE MANUFACTURING PROCEEDS

WEB-TECH AUSTRALIA PTY. LTD.

CERTIFIED BY: DATE / /

CUSTOMER APPROVAL DATE / /

- ☐ APPROVED FOR CONSTRUCTION
- ☐ APPROVED AS NOTED
- ☐ APPROVED AS NOTED – RESUBMIT

UNLESS OTHERWISE STATED UNTOLERANCED DIMENSIONS TO BE WITHIN THE LIMITS SHOWN

NOMINAL SIZE	UP TO 50	ABOVE 50 UP TO 150	ABOVE 150 UP TO 300	ABOVE 300 UP TO 1000	ABOVE 1000
MACHINING	± 0.1	± 0.2	± 0.3	± 0.5	± 1.0
FABRICATION	± 0.5	± 0.5	± 0.5	± 1.0	± 2.0
ASSEMBLIES	± 0.5	± 0.5	± 0.5	± 1.0	± 2.0

DRAWN	M. WILDE
CHECKED	
APPROVED	
DATE APP'D	
SCALE	N.T.S.

DO NOT SCALE IF IN DOUBT ASK

WEB-TECH AUSTRALIA PTY. LTD.
A.C.N. 010 764 431
11 ELECTRONICS STREET EIGHT MILE PLAINS, QUEENSLAND, 4113, AUSTRALIA
P.O. BOX 4006 EIGHT MILE PLAINS, QUEENSLAND, 4113, AUSTRALIA
Phone +61-7-3841 2844 Fax +61-7-3841 0005

TITLE ELECTRICAL CONNECTION DIAGRAM FOR MASTERWEIGH 6

ALL DIMENSIONS IN MILLIMETRES UNLESS OTHERWISE SPECIFIED

This drawing and any information or descriptive matter set out hereon are the confidential and copyright property of WEB-TECH AUSTRALIA PTY. LTD. © and must not be disclosed, loaned, copied or used for manufacturing / tendering or for any other purpose without their written permission.

SIZE	DRAWING No.		
	NUMBER	SHT.	REV.
A1	WTMW6	01	B

CONTRACT

PROJECT

CAD FILE WTMW7

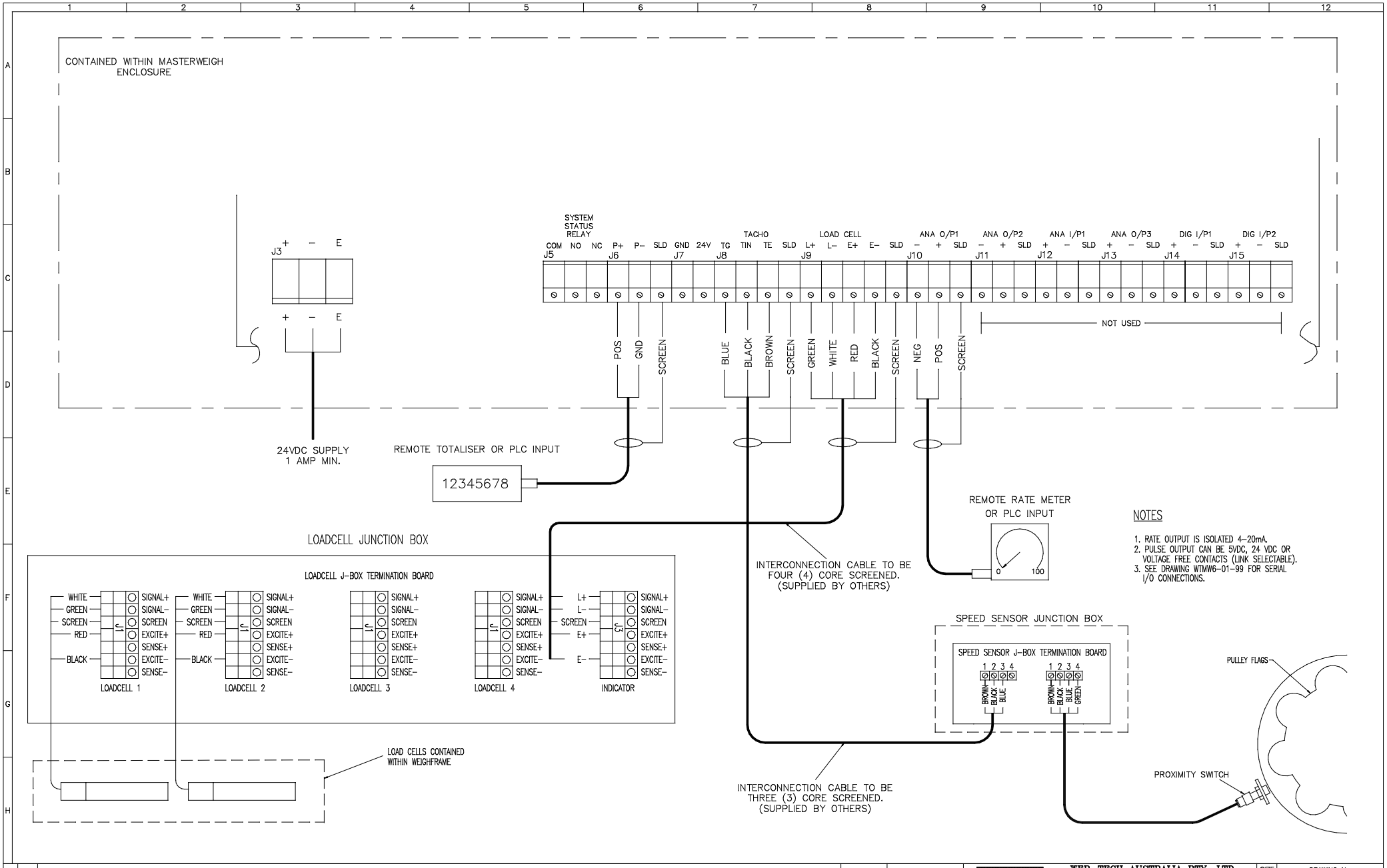

NOTES

1. RATE OUTPUT IS ISOLATED 4–20mA.
2. PULSE OUTPUT CAN BE 5VDC, 24 VDC OR VOLTAGE FREE CONTACTS (LINK SELECTABLE).
3. SEE DRAWING WTMW6-01-99 FOR SERIAL I/O CONNECTIONS.

REVISIONS	
A	15/3/12 ORIGINAL ISSUE DRG-RMD

DRAWN	L.H.
CHECKED	
APPROVED	
DATE APP'D	
SCALE	NTS
	DO NOT SCALE IF IN DOUBT ASK

WEB-TECH AUSTRALIA PTY. LTD.
A.C.N. 010 784 431
11 ELECTRONICS STREET EIGHT MILE PLAINS, QUEENSLAND, 4113, AUSTRALIA
P.O. BOX 4006 EIGHT MILE PLAINS, QUEENSLAND, 4113, AUSTRALIA
Phone +61-7-3841 2844 Fax +61-7-3841 0005

TITLE
ELECTRICAL CONNECTION DIAGRAM FOR DUAL LOAD CELL BELT SCALES INCORP. MASTERWEIGH 6 (24VDC) & PROX SWITCH.

ALL DIMENSIONS IN MILLIMETRES UNLESS OTHERWISE SPECIFIED

SIZE	DRAWING No. NUMBER	REV.
A1	WTMW6–01–13	A

CUSTOMER CONTRACT
PROJECT PROJECT
CAD FILE FILE

This drawing and any information or descriptive matter set out hereon are the confidential and copyright property of WEB-TECH AUSTRALIA PTY. LTD. © and must not be disclosed, loaned, copied or used for manufacturing / tendering or for any other purpose without their written permission.

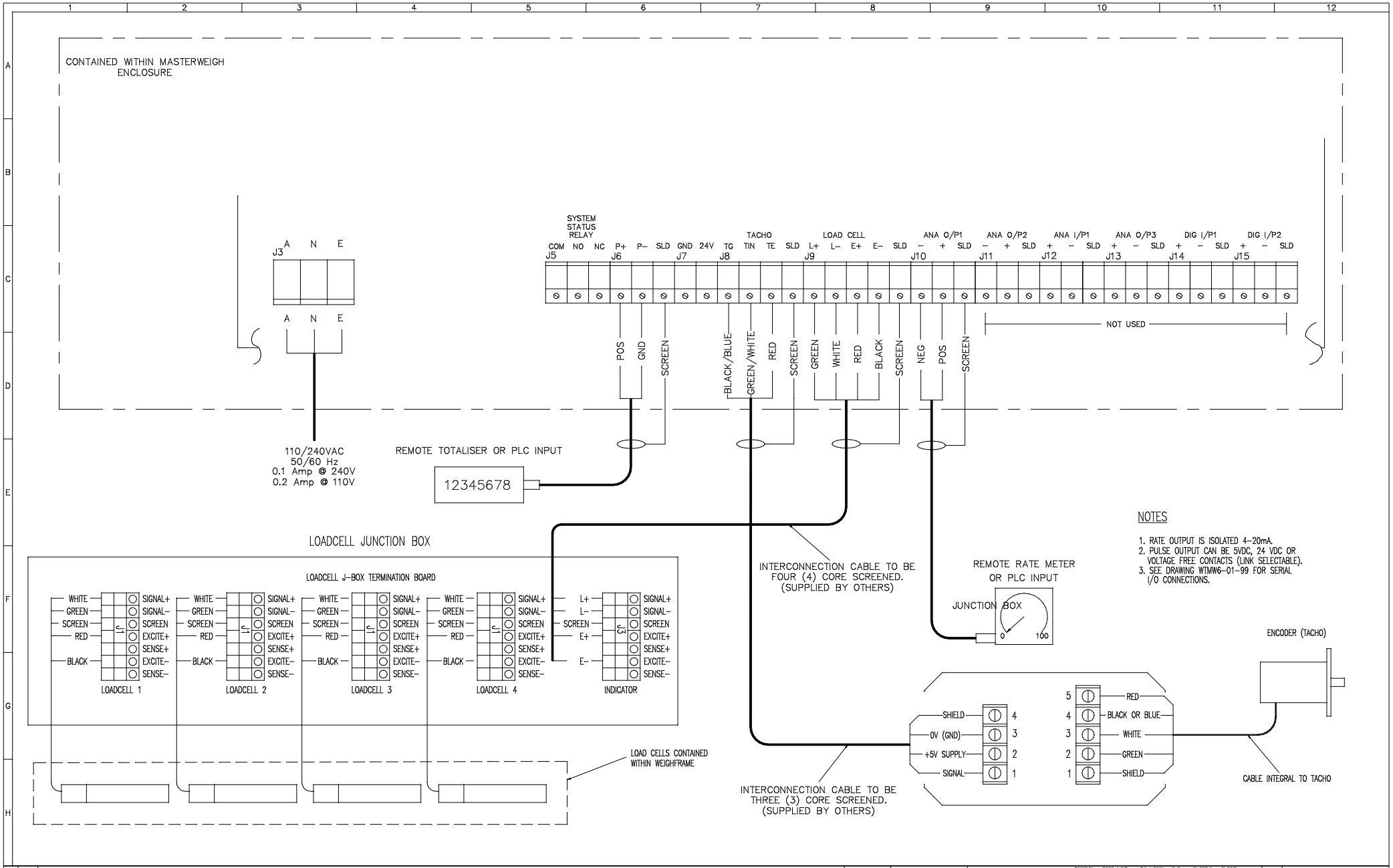

REVISIONS	
A	6/3/12 ORIGINAL ISSUE

DRAWN	L.H.
CHECKED	
APPROVED	
DATE APP'D	
SCALE	N.T.S
	DO NOT SCALE IF IN DOUBT ASK

WEB−TECH AUSTRALIA PTY. LTD.
A.C.N. 010 784 431
11 ELECTRONICS STREET EIGHT MILE PLAINS, QUEENSLAND, 4113, AUSTRALIA
P.O. BOX 4008 EIGHT MILE PLAINS, QUEENSLAND, 4113, AUSTRALIA
Phone +61−7−3841 2844 Fax +61−7−3841 0005

TITLE: ELECTRICAL CONNECTION DIAGRAM FOR FOUR LOAD CELL BELT SCALES INCORP. MASTERWEIGH 6 & TACHO (ENCODER).

ALL DIMENSIONS IN MILLIMETRES UNLESS OTHERWISE SPECIFIED

SIZE	DRAWING No. NUMBER	REV.
A1	WTMW6−01−15	A
CUSTOMER		
PROJECT		
CAD FILE		

This drawing and any information or descriptive matter set out hereon are the confidential and copyright property of WEB−TECH AUSTRALIA PTY. LTD. © and must not be disclosed, loaned, copied or used for manufacturing / tendering or for any other purpose without their written permission.

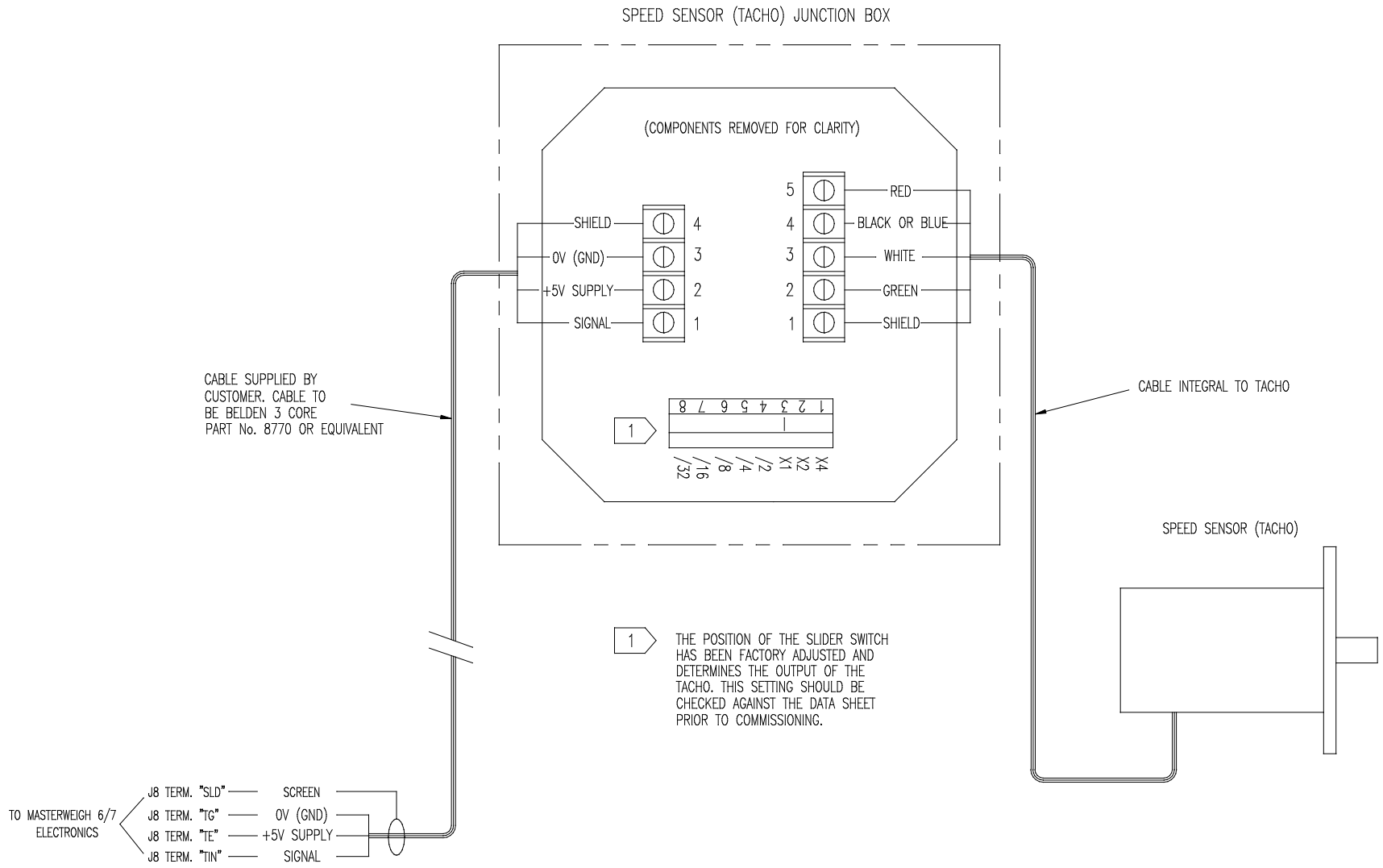

REVISIONS	
A: 26/10/98	ORIGINAL ISSUE

DRAWN	L.HARTLEY
CHECKED	L.HARTLEY
APPROVED	L.HARTLEY
DATE APP'D	26/10/98
SCALE	N.T.S
	DO NOT SCALE IF IN DOUBT ASK

WEB-TECH AUSTRALIA PTY. LTD.
A.C.N. 010 764 431
11 ELECTRONICS STREET EIGHT MILE PLAINS, QUEENSLAND, 4113, AUSTRALIA
P.O. BOX 4006 EIGHT MILE PLAINS, QUEENSLAND, 4113, AUSTRALIA
Phone +61-7-3841 2844 Fax +61-7-3841 0005

TITLE
TACHO (S/S) JUNCTION BOX
WIRING (WITH MULTIPLICATION)
MASTERWEIGH 6/7 INTEGRATOR

ALL DIMENSIONS IN MILLIMETRES UNLESS OTHERWISE SPECIFIED

This drawing and any information or descriptive matter set out hereon are the confidential and copyright property of WEB-TECH AUSTRALIA PTY. LTD. and must not be disclosed, loaned, copied or used for manufacturing / tendering or for any other purpose without their written permission.

SIZE	A1
DRAWING No. NUMBER	JB010015-67
REV.	A
CUSTOMER	
PROJECT	
CAD FILE	JB010015-67

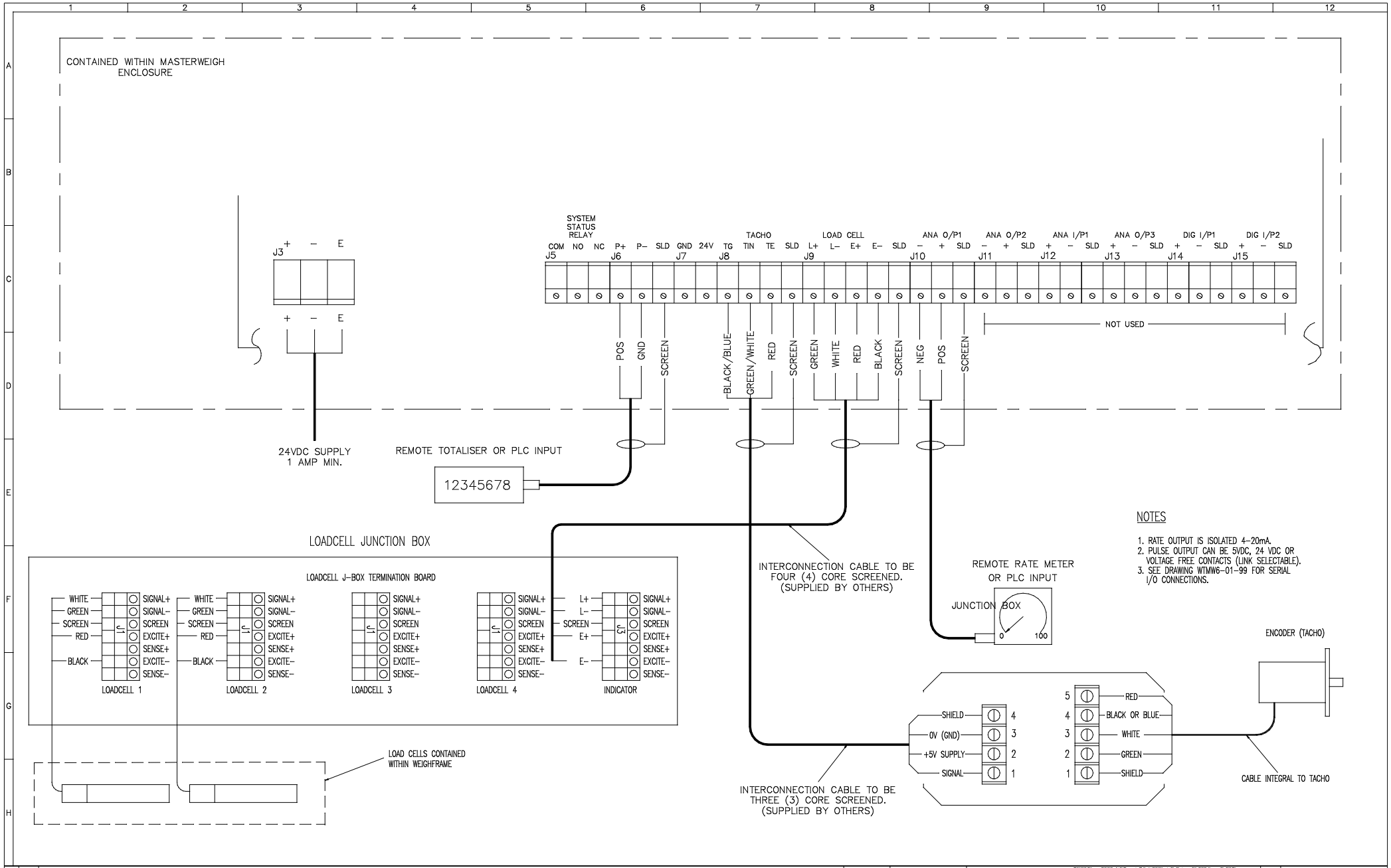

REVISIONS	
A- ORIGINAL ISSUE	15/3/12

DRAWN	L.H.
CHECKED	
APPROVED	
DATE APP'D	
SCALE	NTS
	DO NOT SCALE IF IN DOUBT ASK

WEB−TECH AUSTRALIA PTY. LTD.
ACN. 010 764 431
11 ELECTRONICS STREET EIGHT MILE PLAINS, QUEENSLAND, 4113, AUSTRALIA
P.O. BOX 4008 EIGHT MILE PLAINS, QUEENSLAND, 4113, AUSTRALIA
Phone +61−7−3841 2844 Fax +61−7−3841 0005

TITLE
ELECTRICAL CONNECTION DIAGRAM FOR
DUAL LOAD CELL BELT SCALES INCORP.
MASTERWEIGH 6 (24VDC) & TACHO SENSOR.

ALL DIMENSIONS IN MILLIMETRES UNLESS OTHERWISE SPECIFIED

This drawing and any information or descriptive matter set out hereon are the confidential and copyright property of WEB−TECH AUSTRALIA PTY. LTD. © and must not be disclosed, loaned, copied or used for manufacturing / tendering or for any other purpose without their written permission.

SIZE	DRAWING No. NUMBER	REV.
A1	WTMW6−01−12	A

CUSTOMER
PROJECT
CAD FILE

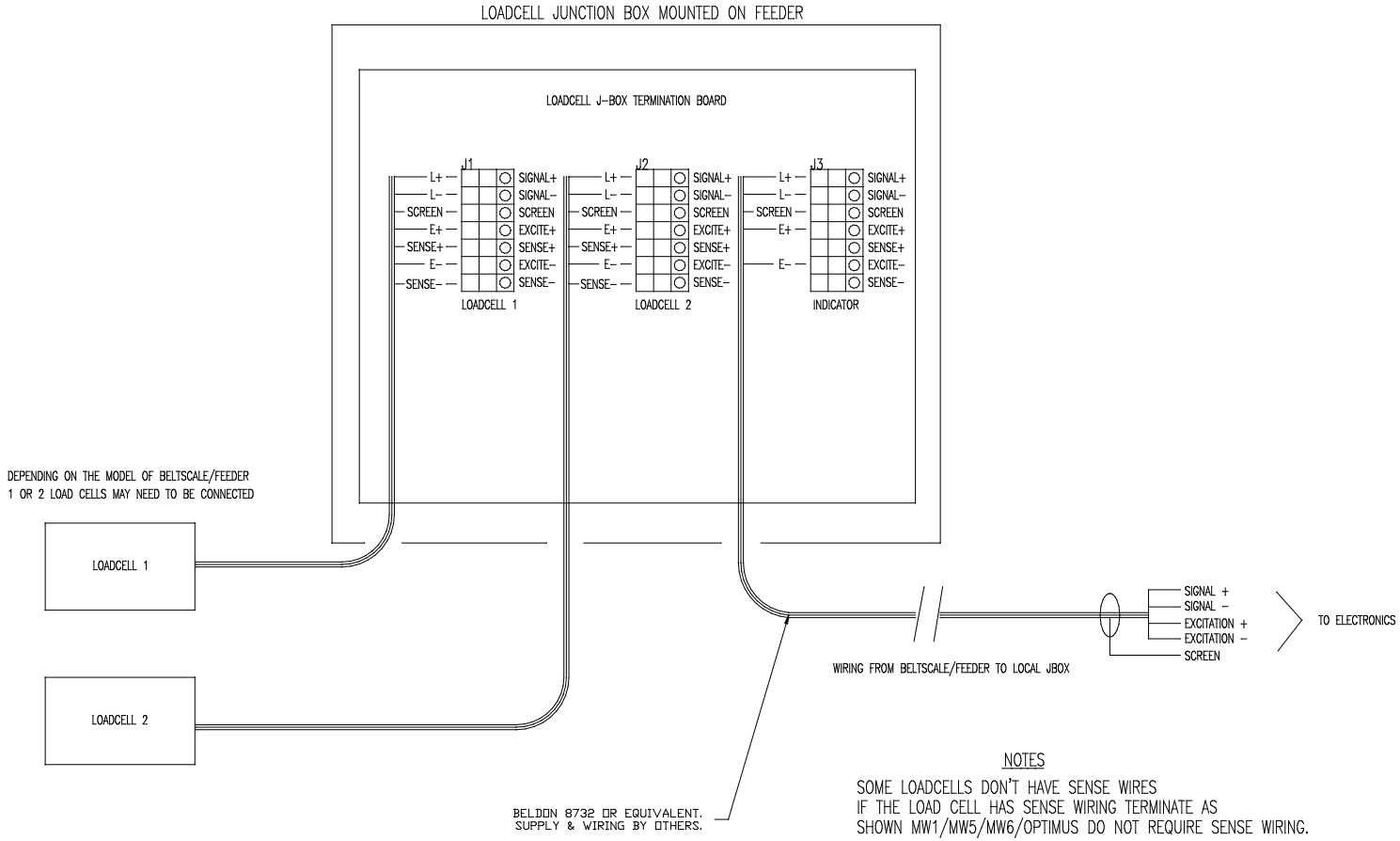

NOTES

SOME LOADCELLS DON'T HAVE SENSE WIRES
IF THE LOAD CELL HAS SENSE WIRING TERMINATE AS
SHOWN MW1/MW5/MW6/OPTIMUS DO NOT REQUIRE SENSE WIRING.

TYPE	L+	L-	E+	E-	SENSE+	SENSE-
TEDEA	RED	WHITE	GREEN	BLACK	BLUE	BROWN
RLHBB	WHITE	RED	BLUE	BLACK	GREEN	GREY
LPX	GREEN	WHITE	RED	BLACK	N/C	N/C
RL30000	GREEN	WHITE	RED	BLACK	N/C	N/C
WTD-132	GREEN	WHITE	RED	BLACK	N/C	N/C
WL3000	GREEN	WHITE	RED	BLACK	N/C	N/C
WHBX-S-C3	GREEN	WHITE	RED	BLACK	N/C	N/C
WHBX-S-C4	WHITE	RED	BLUE	BLACK	N/C	N/C

REVISIONS
A- 29.07.96 ORIGINAL ISSUE

UNLESS OTHERWISE STATED
UNTOLERANCED DIMENSIONS
TO BE WITHIN THE LIMITS SHOWN

NOMINAL SIZE	UP TO 50	ABOVE 50 UP TO 150	ABOVE 150 UP TO 300	ABOVE 300 UP TO 1000	ABOVE 1000
MACHINING	± 0.1	± 0.2	± 0.3	± 0.5	± 1.0
FABRICATION	± 0.5	± 0.5	± 0.5	± 1.0	± 2.0
ASSEMBLIES	± 0.5	± 0.5	± 0.5	± 1.0	± 2.0

DRAWN	M.W.
CHECKED	M.W.
APPROVED	M.W.
DATE APP'D	18/06/2003
SCALE	N.T.S.
	DO NOT SCALE IF IN DOUBT ASK

WEB-TECH AUSTRALIA PTY. LTD.
A.C.N. 010 764 431
11 ELECTRONICS STREET EIGHT MILE PLAINS, QUEENSLAND, 4113, AUSTRALIA
P.O. BOX 4096 EIGHT MILE PLAINS, QUEENSLAND, 4113, AUSTRALIA
Phone +61-7-3841 2844 Fax +61-7-3841 0005

TITLE
LOADCELL JUNCTION BOX CONNECTION DIAGRAM

ALL DIMENSIONS IN MILLIMETRES
UNLESS OTHERWISE SPECIFIED

This drawing and any information or descriptive matter set out hereon are the confidential and copyright property of WEB-TECH AUSTRALIA PTY. LTD.© and must not be disclosed, loaned, copied or used for manufacturing / tendering or for any other purpose without their written permission.

SIZE	DRAWING No.		
	NUMBER	SHT.	REV.
A1	SMLCJB-02	1	C

CONTRACT
PROJECT
CAD FILE

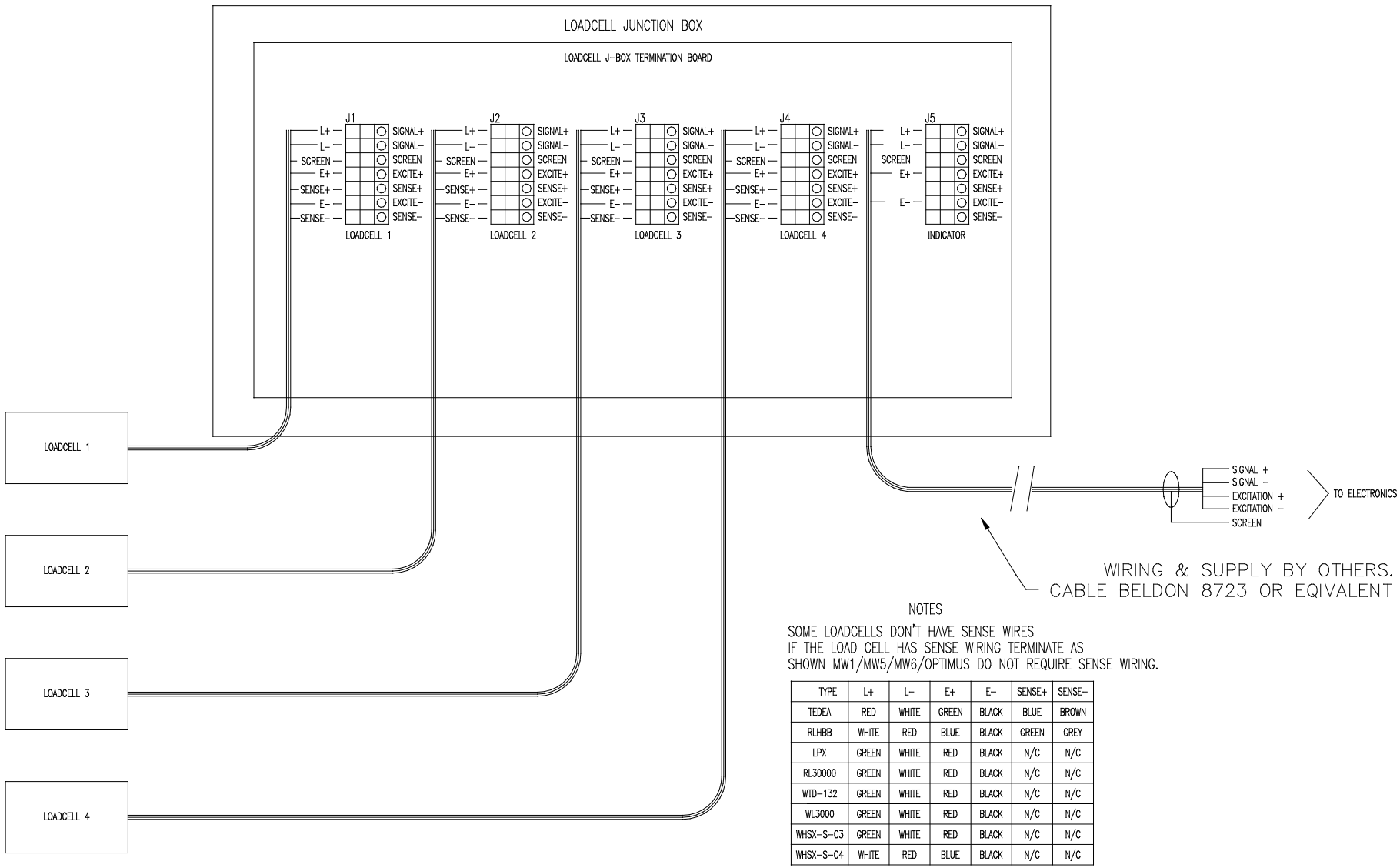

NOTES

SOME LOADCELLS DON'T HAVE SENSE WIRES
IF THE LOAD CELL HAS SENSE WIRING TERMINATE AS
SHOWN MW1/MW5/MW6/OPTIMUS DO NOT REQUIRE SENSE WIRING.

TYPE	L+	L-	E+	E-	SENSE+	SENSE-
TEDEA	RED	WHITE	GREEN	BLACK	BLUE	BROWN
RLHBB	WHITE	RED	BLUE	BLACK	GREEN	GREY
LPX	GREEN	WHITE	RED	BLACK	N/C	N/C
RL30000	GREEN	WHITE	RED	BLACK	N/C	N/C
WTD-132	GREEN	WHITE	RED	BLACK	N/C	N/C
WL3000	GREEN	WHITE	RED	BLACK	N/C	N/C
WHSX-S-C3	GREEN	WHITE	RED	BLACK	N/C	N/C
WHSX-S-C4	WHITE	RED	BLUE	BLACK	N/C	N/C

REVISIONS

A	29.07.96	ORIGINAL ISSUE
B	19.03.04	ORIGINAL ISSUE
C	24.08.10	ADDED LOAD CELLS

UNLESS OTHERWISE STATED
UNTOLERANCED DIMENSIONS
TO BE WITHIN THE LIMITS SHOWN

NOMINAL SIZE	UP TO 60	ABOVE 60 UP TO 150	ABOVE 150 UP TO 300	ABOVE 300 UP TO 1000	ABOVE 1000
MACHINING	± 0.1	± 0.2	± 0.3	± 0.5	± 1.0
FABRICATION	± 0.5	± 0.5	± 0.5	± 1.0	± 2.0
ASSEMBLIES	± 0.5	± 0.5	± 0.5	± 1.0	± 2.0

DRAWN	M.W.
CHECKED	M.W.
APPROVED	M.W.
DATE APP'D	24/10/2003
SCALE	N.T.S.
	DO NOT SCALE IF IN DOUBT ASK

WEB-TECH AUSTRALIA PTY. LTD.
A.C.N. 010 764 431
11 ELECTRONICS STREET EIGHT MILE PLAINS, QUEENSLAND, 4113, AUSTRALIA
P.O. BOX 4996 EIGHT MILE PLAINS, QUEENSLAND, 4113, AUSTRALIA
Phone +61-7-3841 2844 Fax +61-7-3841 0005

TITLE
LOADCELL J-BOX (LARGE) CONNECTION DIAGRAM
FOR VARIOUS TYPE LOADCELLS

SIZE	DRAWING No. NUMBER	SHT.	REV.
A1	LJBL-01	1	C

CONTRACT
PROJECT
CAD FILE

ALL DIMENSIONS IN MILLIMETRES
UNLESS OTHERWISE SPECIFIED

This drawing and any information or descriptive matter set out hereon are the confidential and copyright property of WEB-TECH AUSTRALIA PTY. LTD. © and must not be disclosed, loaned, copied or used for manufacturing / tendering or for any other purpose without their written permission.

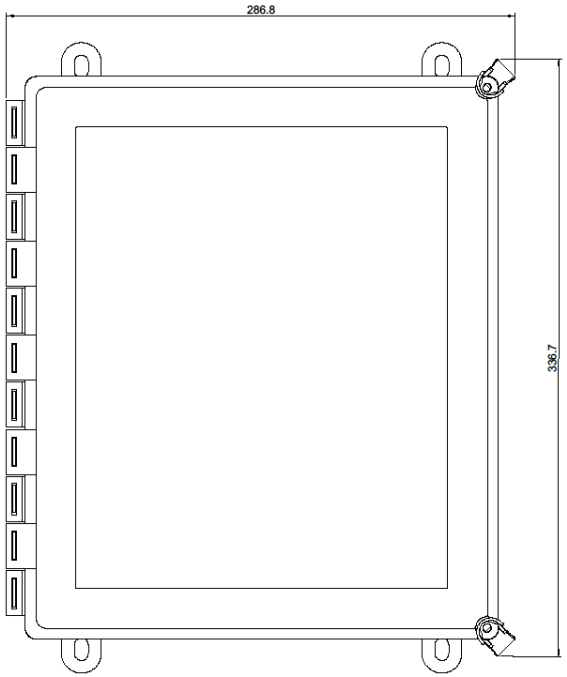

FRONT VIEW

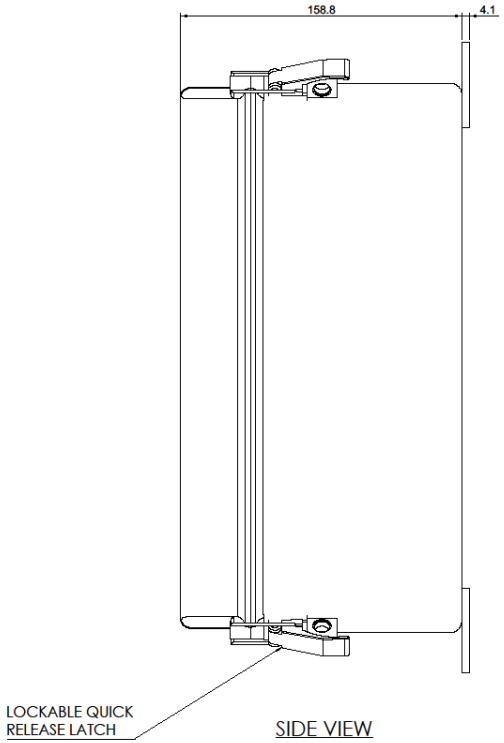

SIDE VIEW

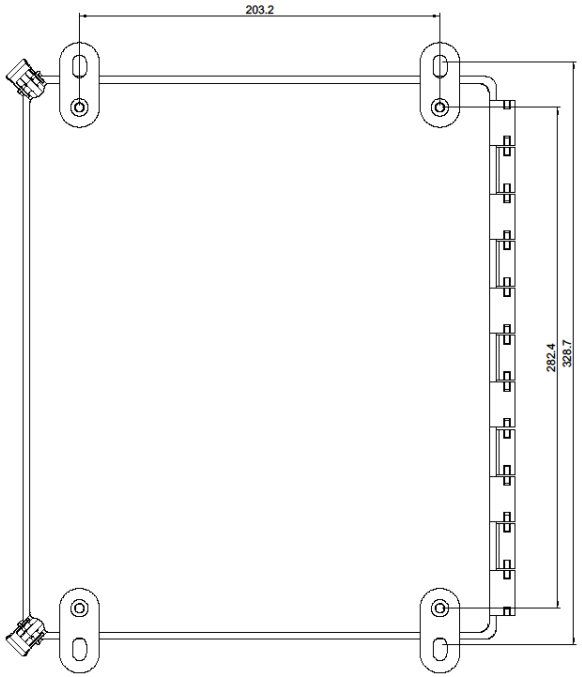

REAR VIEW

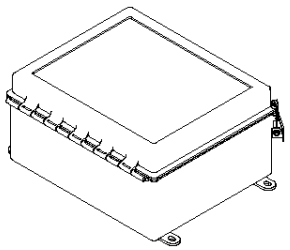

ISOMETRIC VIEW
SCALE 1:4

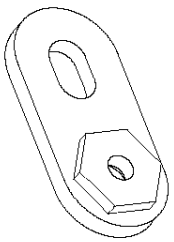

FOOT ISOMETRIC VIEW
SCALE 2:1

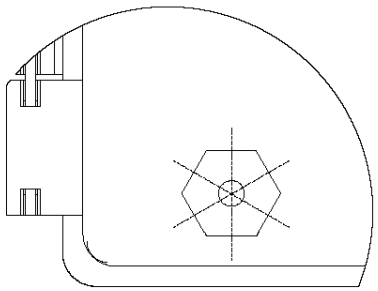

DETAIL A
SCALE 2:1

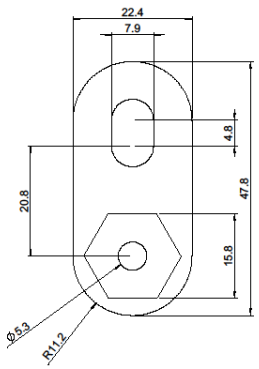

FOOT FRONT VIEW
SCALE 2:1

IP66, IEC 60529

REVISIONS	
A: 26/07/16 ORIGINAL ISSUE	B.ROBINSON

UNLESS OTHERWISE STATED
UNTOLERANCED DIMENSIONS
TO BE WITHIN THE LIMITS SHOWN

NOMINAL SIZE	UP TO 30	ABOVE 30 UP TO 180	ABOVE 180 UP TO 360	ABOVE 360 UP TO 1000	ABOVE 1000
MACHINING	±. 0.1	±. 0.2	±. 0.3	±. 0.5	±. 1.0
FABRICATION	±. 0.5	±. 0.5	±. 0.5	±. 1.0	±. 2.0
ASSEMBLES	±. 0.5	±. 0.5	±. 0.5	±. 1.0	±. 2.0

DRAWN	B.ROBINSON
CHECKED	
APPROVED	
DATE APP'D	
SCALE	1:2

DO NOT SCALE
IF IN DOUBT
ASK

WEB-TECH AUSTRALIA PTY. LTD.
A.C.N. 010 784 401
11 ELECTRONICS STREET EIGHT MILE PLAINS, QUEENSLAND, 4113, AUSTRALIA
P.O. BOX 4006 EIGHT MILE PLAINS, QUEENSLAND, 4113, AUSTRALIA
Phone +61-7-3841 2844 Fax +61-7-3841 0866

TITLE
MW6 ENCLOSURE TYPICAL DIMENSIONS
IP66, IEC 60529

ALL DIMENSIONS IN MILLIMETRES
UNLESS OTHERWISE SPECIFIED

This drawing and any information or descriptive matter set out hereon are the confidential and copyright property of WEB-TECH AUSTRALIA PTY. LTD. and must not be disclosed, loaned, copied or used for manufacturing / tendering or for any other purpose without their written permission.

SIZE	DRAWING No.	
A1	NUMBER MW651	REV. A

CUSTOMER
PROJECT
CAD FILE
MW651a - Enclosure G/A

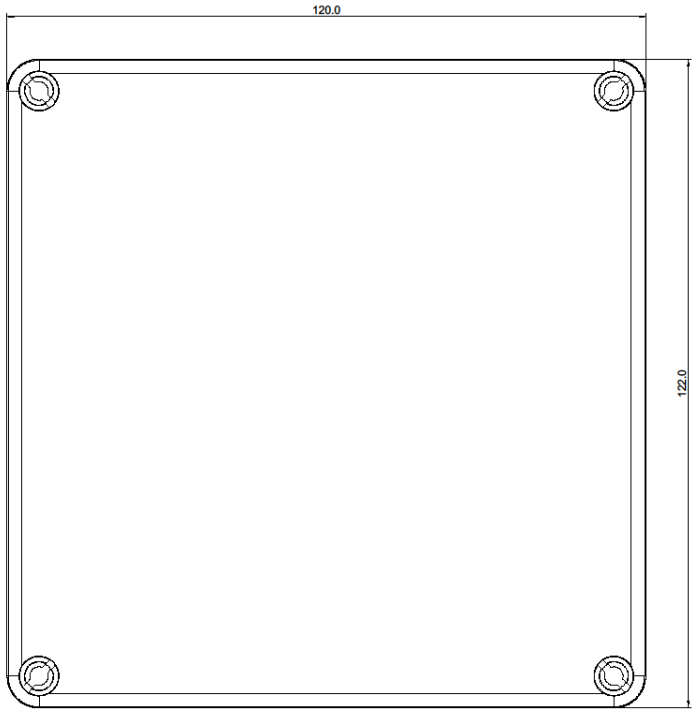

FRONT VIEW

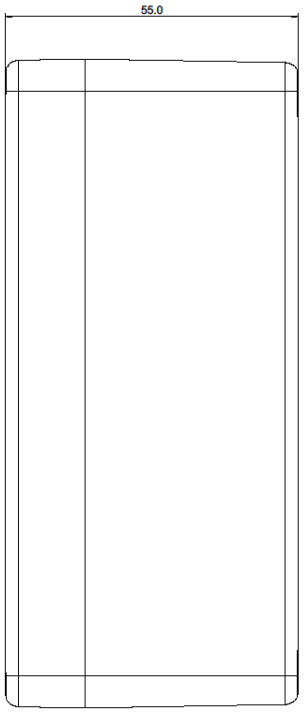

SIDE VIEW

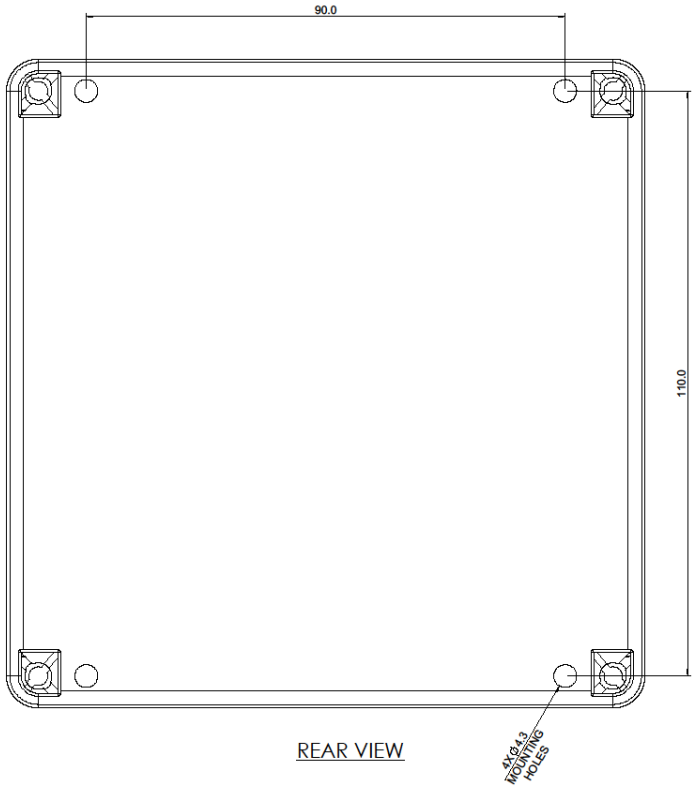

REAR VIEW

REVISIONS	
A: 07/07/16	B.ROBINSON
ORIGINAL ISSUE	

UNLESS OTHERWISE STATED
UNTOLERANCED DIMENSIONS
TO BE WITHIN THE LIMITS SHOWN

NOMINAL SIZE	UP TO 30	ABOVE 30 UP TO 180	ABOVE 180 UP TO 360	ABOVE 360 UP TO 1000	ABOVE 1000
MACHINING	±. 0.1	±. 0.2	±. 0.3	±. 0.5	±. 1.0
FABRICATION	±. 0.5	±. 0.5	±. 0.5	±. 1.0	±. 2.0
ASSEMBLIES	±. 0.5	±. 0.5	±. 0.5	±. 1.0	±. 2.0

DRAWN	B.ROBINSON
CHECKED	
APPROVED	
DATE APP'D	
SCALE	2:1

DO NOT SCALE
IF IN DOUBT
ASK

WEB-TECH AUSTRALIA PTY. LTD.
A.C.N. 010 794 431
11 ELECTRONICS STREET EIGHT MILE PLAINS, QUEENSLAND, 4113, AUSTRALIA
P.O. BOX 4006 EIGHT MILE PLAINS, QUEENSLAND, 4113, AUSTRALIA
Phone +61-7-3841 2844 Fax +61-7-3841 0866

TITLE
SINGLE LOAD CELL, 2 LOAD CELL AND SPEED SENSOR JUNCTION BOX
GENERAL ARRANGEMENT

ALL DIMENSIONS IN MILLIMETRES
UNLESS OTHERWISE SPECIFIED

This drawing and any information or descriptive matter set out hereon are the confidential and copyright property of WEB-TECH AUSTRALIA PTY. LTD. and must not be disclosed, loaned, copied or used for manufacturing / tendering or for any other purpose without their written permission.

SIZE	DRAWING No.	
A1	NUMBER LGLCJB-03GA	REV. A

CUSTOMER

PROJECT

CAD FILE
LGLCJB-03GAa

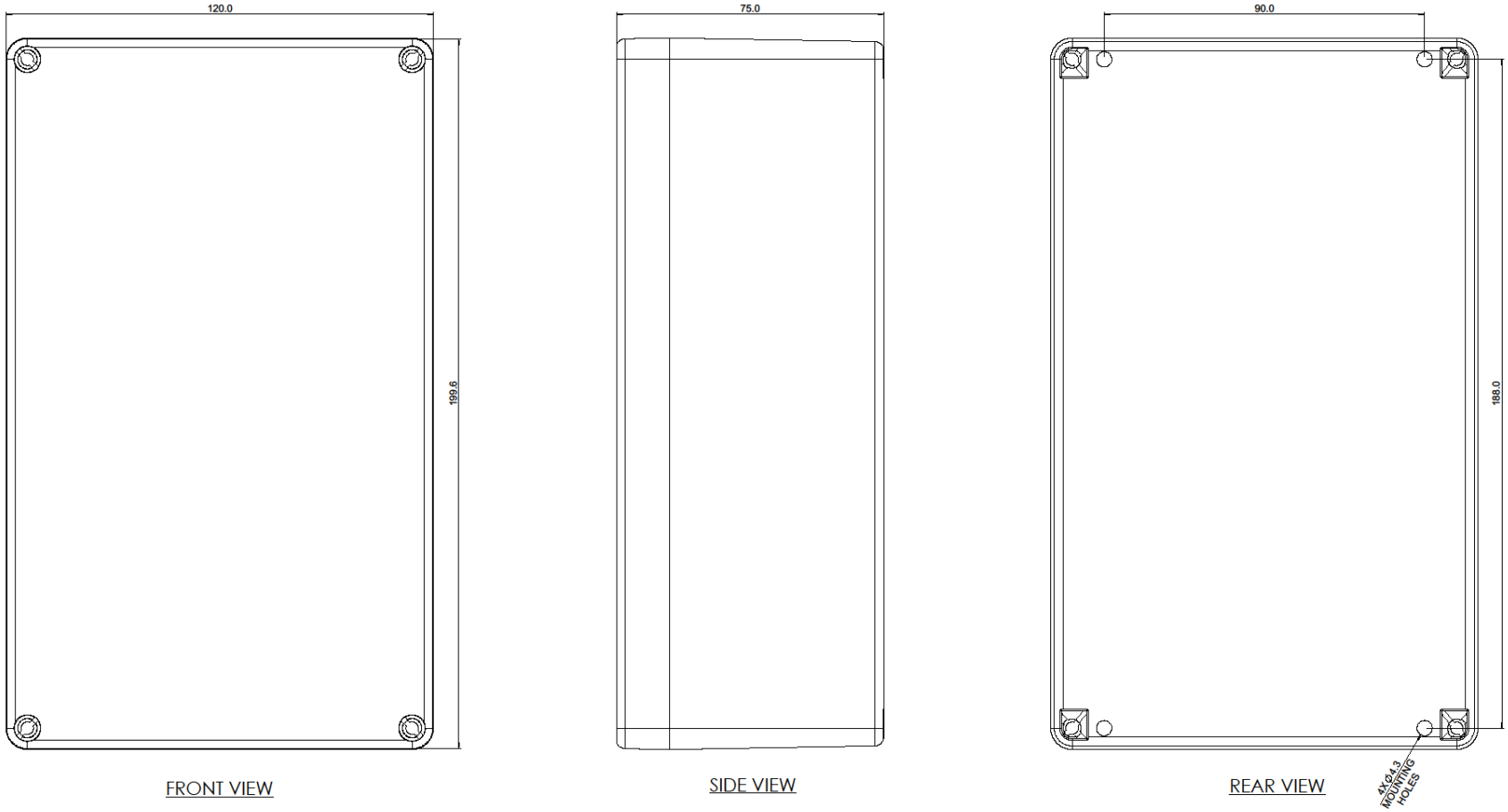

REVISIONS		
A	07/07/16 ORIGINAL ISSUE	B.ROBINSON

UNLESS OTHERWISE STATED
UNTOLERANCED DIMENSIONS
TO BE WITHIN THE LIMITS SHOWN

NOMINAL SIZE	UP TO 10	ABOVE 10 UP TO 100	ABOVE 100 UP TO 300	ABOVE 300 UP TO 1000	ABOVE 1000
MACHINING	±0.1	±0.2	±0.3	±0.5	±1.0
FABRICATION	±0.5	±0.5	±0.5	±1.0	±2.0
ASSEMBLIES	±0.5	±0.5	±0.5	±1.0	±2.0

DRAWN	B.ROBINSON
CHECKED	
APPROVED	
DATE APP'D	
SCALE	1.5:1

DO NOT SCALE
IF IN DOUBT
ASK

WEB-TECH AUSTRALIA PTY. LTD.
A.C.N. 010 794 431
11 ELECTRONICS STREET EIGHT MILE PLAINS, QUEENSLAND, 4113, AUSTRALIA
P.O. BOX 4006 EIGHT MILE PLAINS, QUEENSLAND, 4113, AUSTRALIA
Phone +61-7-3841 2844 Fax +61-7-3841 0866

TITLE

4 LOAD CELL JUNCTION BOX GENERAL ARRANGEMENT

ALL DIMENSIONS IN MILLIMETRES
UNLESS OTHERWISE SPECIFIED

This drawing and any information or descriptive matter set out hereon are the confidential and copyright property of WEB-TECH AUSTRALIA PTY. LTD. and must not be disclosed, loaned, copied or used for manufacturing / tendering or for any other purpose without their written permission.

SIZE	DRAWING No.	
A1	NUMBER LGLCJB-04GA	REV. A

CUSTOMER

PROJECT

CAD FILE
LGLCJB-04GAa

WEIGHFRAME TO LOADING POINT DISTANCE

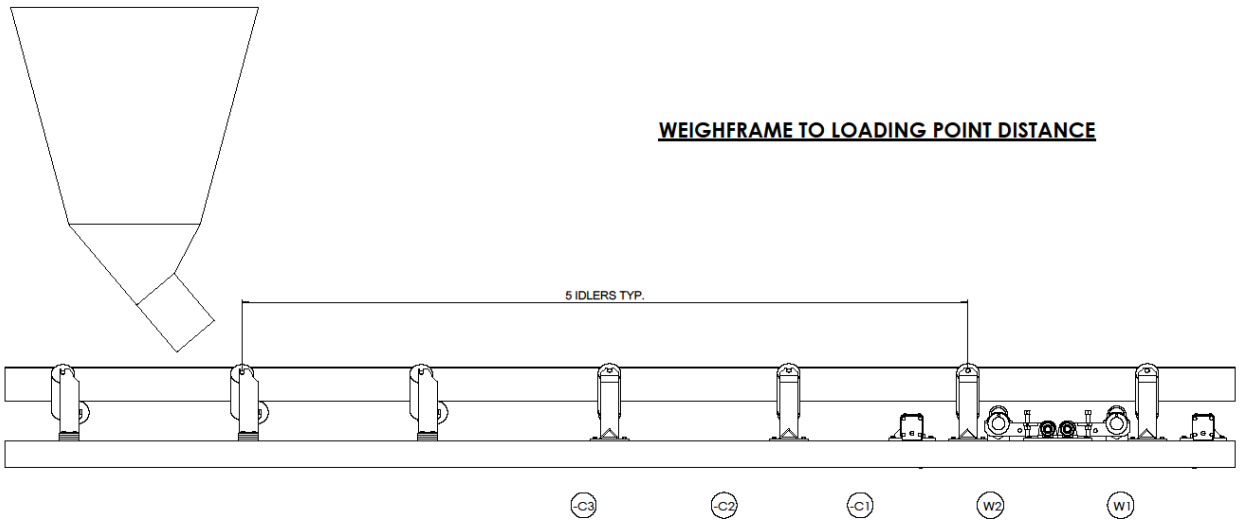

THE WEIGHFRAME SHOULD NE LOCATED FAR ENOUGH FROM THE LOADING POINT TO ENSURE THAT THE MATERIAL HAS ACHIEVED THE SAME VELOCITY AS THE CONVEYOR BELT. TYPICALLY MOST MATERIALS WILL SETTLE WITHIN 5 IDLER SPACINGS OF THE LOADING POINT.

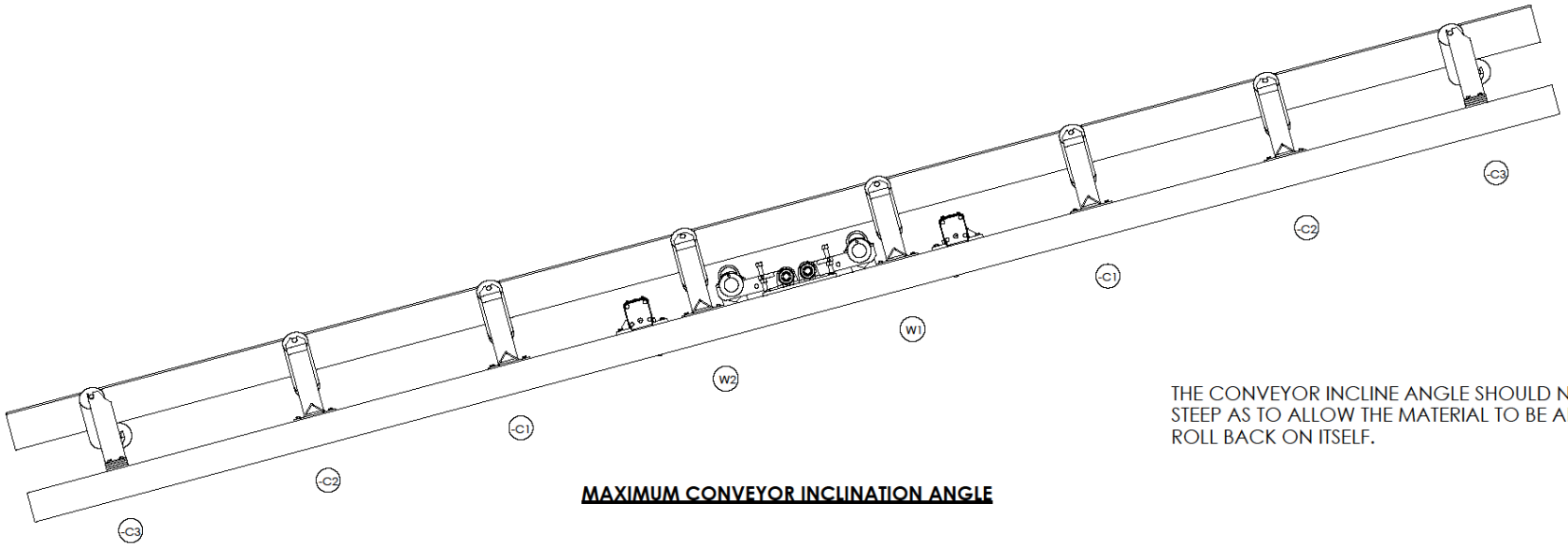

MAXIMUM CONVEYOR INCLINATION ANGLE

THE CONVEYOR INCLINE ANGLE SHOULD NOT BE SO STEEP AS TO ALLOW THE MATERIAL TO BE ABLE TO ROLL BACK ON ITSELF.

REVISIONS

A: 30/06/16 B.ROBINSON ISSUED FOR APPROVAL

UNLESS OTHERWISE STATED UNTOLERANCED DIMENSIONS TO BE WITHIN THE LIMITS SHOWN

NOMINAL SIZE	UP TO 50	ABOVE 50 UP TO 150	ABOVE 150 UP TO 300	ABOVE 300 UP TO 1000	ABOVE 1000
MACHINING	± 0.1	± 0.2	± 0.3	± 0.5	± 1.0
FABRICATION	± 0.5	± 0.5	± 0.5	± 1.0	± 2.0
ASSEMBLIES	± 0.5	± 0.5	± 0.5	± 1.0	± 2.0

DRAWN	B.ROBINSON
CHECKED	
APPROVED	
DATE APP'D	
SCALE	N.T.S

DO NOT SCALE
IF IN DOUBT
ASK

WEB-TECH AUSTRALIA PTY. LTD.
A.C.N. 010 394 432
11 ELECTRONICS STREET EIGHT MILE PLAINS, QUEENSLAND, 4113, AUSTRALIA
P.O. BOX 4006 EIGHT MILE PLAINS, QUEENSLAND, 4113, AUSTRALIA
Phone: +61-7-3841 2844 Fax: +61-7-3841 0805

TITLE

CONVEYOR LOADING DISTANCE
MAXIMUM CONVEYOR INCLINATION

ALL DIMENSIONS IN MILLIMETRES
UNLESS OTHERWISE SPECIFIED

The drawing and any information or descriptive matter set out hereon are the confidential and copyright property of WEB-TECH AUSTRALIA PTY. LTD. and must not be disclosed, loaned, copied or used for manufacturing / tendering or for any other purpose without their written permission.

SIZE	DRAWING No.	
A1	NUMBER BSSG01	REV. A

CUSTOMER

PROJECT

CAD FILE
BSSG01 - Loading Distance Max Inclination

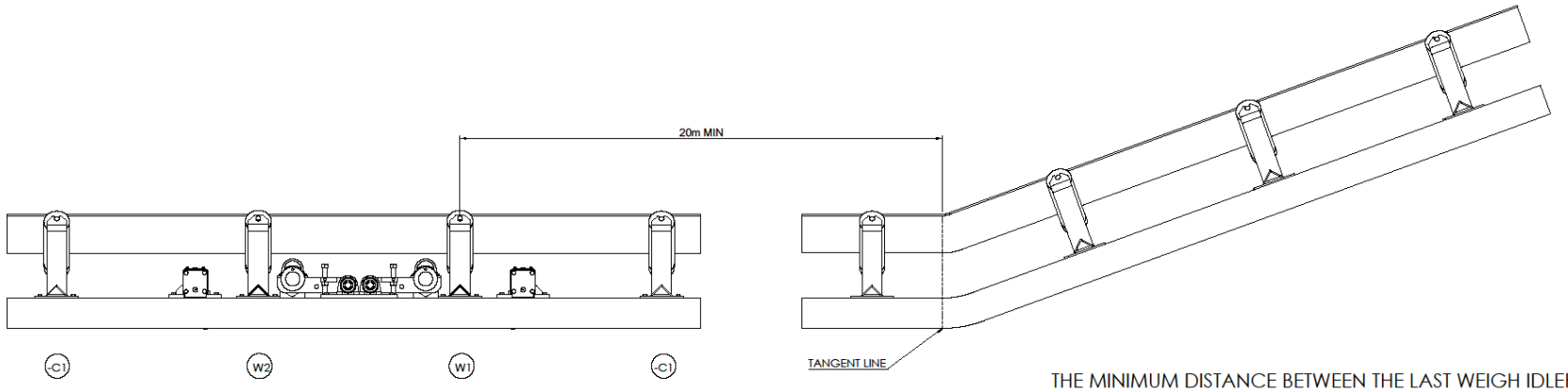

CONCAVE CURVES

THE MINIMUM DISTANCE BETWEEN THE LAST WEIGH IDLER
ON THE WEIGHFRAME AND THE TANGENT POINT OF THE CURVE
SHOULD BE NO LESS THAN 20m AND PREFERABLY 30m IF POSSIBLE.

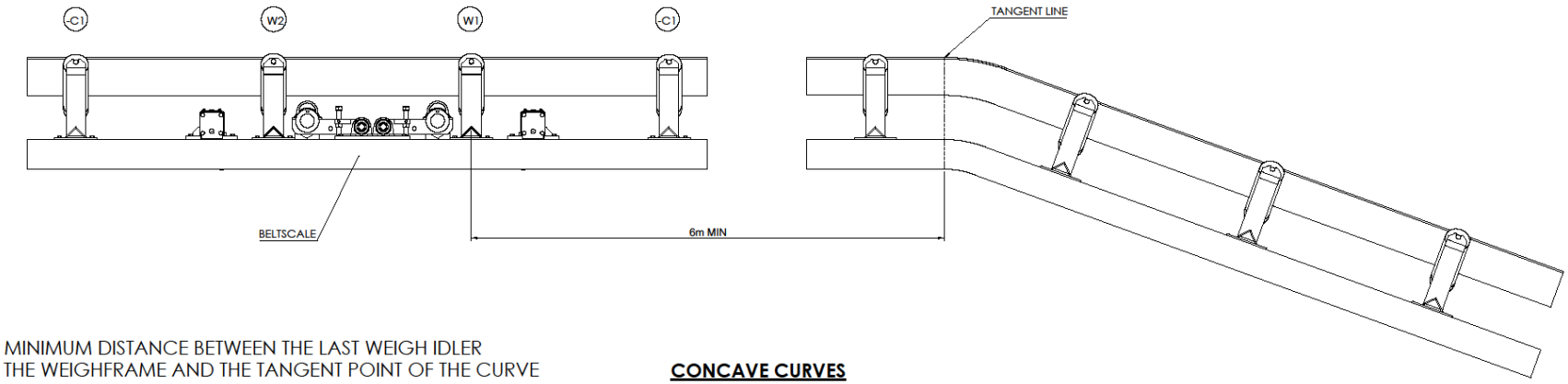

THE MINIMUM DISTANCE BETWEEN THE LAST WEIGH IDLER
ON THE WEIGHFRAME AND THE TANGENT POINT OF THE CURVE
SHOULD BE NO LESS THAN 6m.

CONCAVE CURVES

REVISIONS

A: 30/06/16 B.ROBINSON
ISSUED FOR APPROVAL

UNLESS OTHERWISE STATED
UNTOLERANCED DIMENSIONS
TO BE WITHIN THE LIMITS SHOWN

NOMINAL SIZE	UP TO 50	ABOVE UP TO 150	ABOVE UP TO 300	ABOVE UP TO 1000	ABOVE 1000
MACHINING	± 0.1	± 0.2	± 0.3	± 0.5	± 1.0
FABRICATION	± 0.5	± 0.5	± 0.5	± 1.0	± 2.0
ASSEMBLIES	± 0.5	± 0.5	± 0.5	± 1.0	± 2.0

DRAWN	B.ROBINSON
CHECKED	
APPROVED	
DATE APPD	
SCALE	N.T.S
	DO NOT SCALE IF IN DOUBT ASK

WEB-TECH AUSTRALIA PTY. LTD.
A.C.N. 010 764 431
11 ELECTRONICS STREET EIGHT MILE PLAINS, QUEENSLAND, 4113, AUSTRALIA
P.O. BOX 4066 EIGHT MILE PLAINS, QUEENSLAND, 4113, AUSTRALIA
Phone +61-7-3841 2844 Fax +61-7-3841 0005

TITLE

BELTSCALE PLACEMENT
CONCAVE CURVES, CONVEX CURVES

ALL DIMENSIONS IN MILLIMETRES
UNLESS OTHERWISE SPECIFIED

This drawing and any information or descriptive matter set out hereon are the confidential and copyright property of WEB-TECH AUSTRALIA PTY. LTD. and must not be disclosed, loaned, copied or used for manufacturing / tendering or for any other purpose without their written permission.

©

SIZE	DRAWING No.	
A1	NUMBER BSSG02	REV. A

CUSTOMER

PROJECT

CAD FILE
BSSG02 - Concave Curve Convex Curves

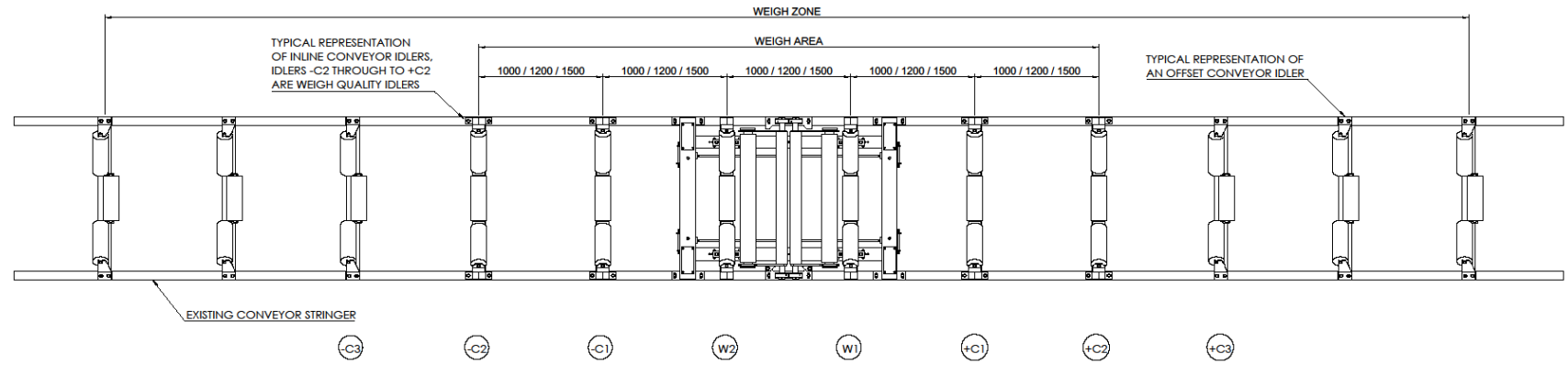

PLAN VIEW

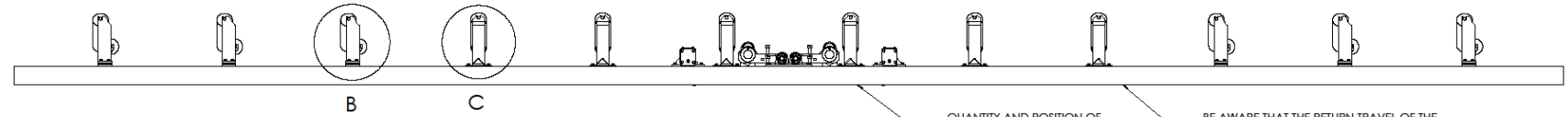

SIDE VIEW

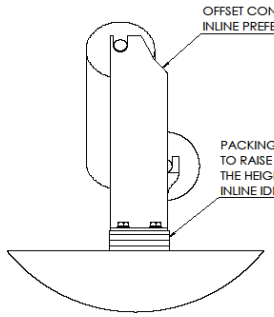

DETAIL B
SCALE 1 : 5

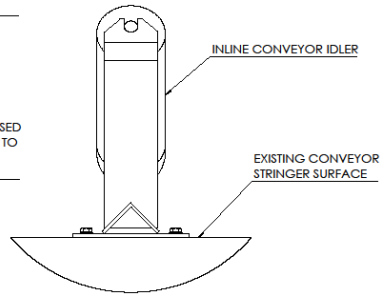

DETAIL C
SCALE 1 : 5

S = 0.055 × W + 20 mm
S = STANDARD EDGE MARGIN
W = BELT WIDTH

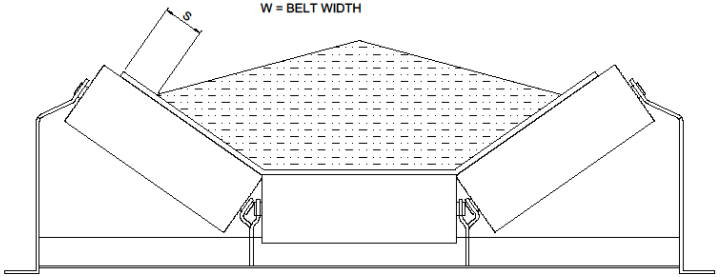

BELT LOADING

BELT SHOULD BE 75% - 80% VOLUMETRICALLY FULL

NOTES

1. CONVEYOR IDLERS FROM +C2 THRU TO -C2 (WEIGH QUALITY, 6 OFF) MUST BE INLINE IDLERS, NOT OFFSET IDLERS.
2. CONVEYOR IDLERS FROM +C3 THRU TO -C3 MUST BE MOUNTED AT RIGHT ANGLES TO THE DIRECTION OF BELT CENTRELINE, DIMENSIONS SHOWN BETWEEN IDLERS MUST BE MAINTAINED TO A TOLERANCE OF ±0.5mm.
3. IGNORE THIS NOTE IF INLINE IDLERS ARE SOLEY USED. GENERALLY IDLER HEIGHTS FOR OFFSET IDLERS IS LESS THAN THOSE FOR INLINE IDLERS. PACKERS MAY BE USED TO RAISE OFFSET IDLERS TO THE HEIGHT OF INLINE IDLERS. (REFER TO DETAIL B) AS A RULE, A 3.0mm GRADIENT PER METRE IS AN ALLOWABLE TOLERANCE HEIGHT BETWEEN ROLL HEIGHTS
4. ROLLS +C2 THRU TO -C2, INCLUDING W2 THRU TO W1 ARE TO BE DRILLED AND TAPPED M8, (18 ROLLS IN TOTAL). REFER DETAIL A.
5. PRIOR TO ALIGNING IDLERS, LOSSEN OFF THE TRANSIT / SHIPPING BOLTS AND REMOVE TRANSIT PACKERS, REFER TO DRAWING WTS2S200 FOR THEIR LOCATION.
6. ALL ROLLS MUST BE ADJUSTED TO STRINGLINE REFERENCE TO A TOLERANCE OF ±0.4mm, -0.0mm. LEVEL CENTRE ROLLS ON +C2 AND -C2 IDLERS PRIOR TO ANY ADJUSTMENTS. ENSURE ALL LOCKING NUTS BE TIGHTENED AFTER ADJUSTMENTS ARE COMPLETED.

REVISIONS

A: 29/06/16 B.ROBINSON
ISSUED FOR APPROVAL

UNLESS OTHERWISE STATED UNTOLERANCED DIMENSIONS TO BE WITHIN THE LIMITS SHOWN

NOMINAL SIZE	UP TO 3M	ABOVE 3M UP TO 15M	ABOVE 15M UP TO 3M	ABOVE 3M UP TO 10M	ABOVE 10M
MACHINING	± 0.1	± 0.2	± 0.3	± 0.5	± 1.0
FABRICATION	± 0.5	± 0.5	± 0.5	± 1.0	± 2.0
ASSEMBLIES	± 0.5	± 0.5	± 0.5	± 1.0	± 2.0

DRAWN	B.ROBINSON
CHECKED	
APPROVED	
DATE APP'D	
SCALE	N.T.S

DO NOT SCALE
IF IN DOUBT
ASK

WEB-TECH AUSTRALIA PTY. LTD.
A.C.N. 010 704 431
11 ELECTRONICS STREET EIGHT MILE PLAINS, QUEENSLAND, 4113, AUSTRALIA
P.O. BOX 4006 EIGHT MILE PLAINS, QUEENSLAND, 4113, AUSTRALIA
Phone: +61-7-3841 2844 Fax: +61-7-3841 0003

TITLE
WEIGHSPAN, WEIGHZONE, WEIGH QUALITY IDLERS AND BELT LOADING

SIZE	DRAWING No. NUMBER	REV.
A1	BSSG03	A

CUSTOMER
PROJECT
CAD FILE
BSSG03 - Weighspan and Belt Loading

ALL DIMENSIONS IN MILLIMETRES
UNLESS OTHERWISE SPECIFIED

This drawing and any information or descriptive matter set out hereon are the confidential and copyright property of WEB-TECH AUSTRALIA PTY. LTD. and must not be disclosed, loaned, copied or used for manufacturing, tendering or for any other purpose without their written permission.
©

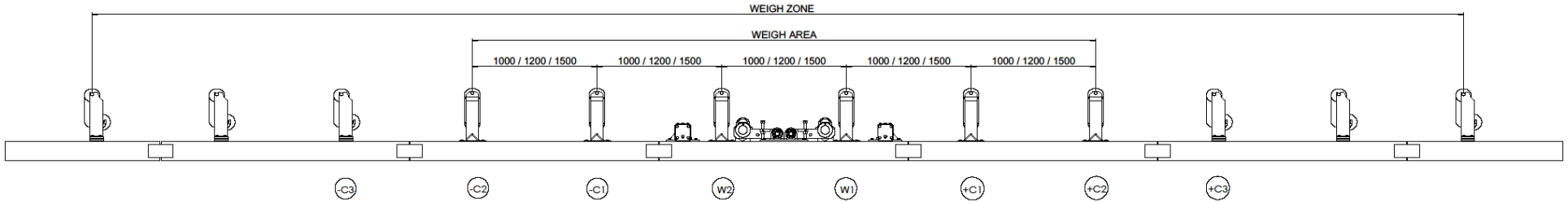

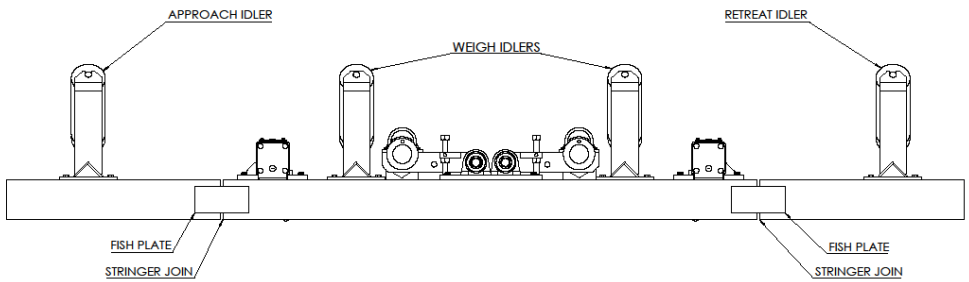

WEIGHFRAME MUST BE INSTALLED WITH AT LEAST ONE APPROACH AND RETREAT IDLER ON THE SAME SECTION OF CONVEYOR STRINGER. WHERE THIS IS NOT POSSIBLE, WELD "FISH" PLATE(S) BETWEEN STRINGER JOINTS TO PREVENT MOVEMENT.

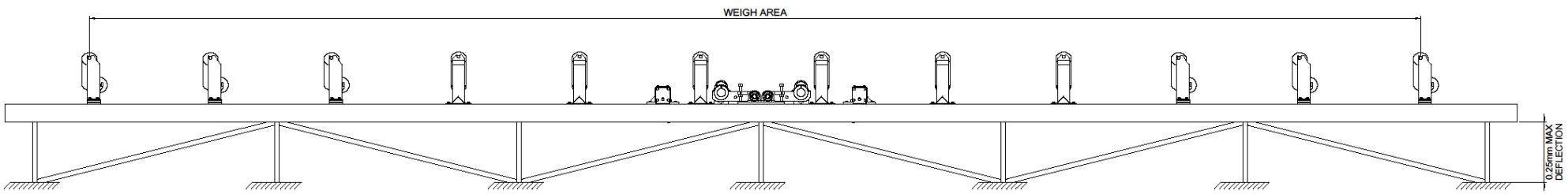

ENSURE THAT CONVEYOR STRUCTURE IS ADEQUATELY SUPPORTED WITHIN THE WEIGH AREA. TOTAL DEFLECTION UNDER LOAD SHOULD NOT EXCEDE 0.25mm

REVISIONS		
A: 30/06/16	B.ROBINSON	ISSUED FOR APPROVAL
B: 22/07/16	B.ROBINSON	ADDED OTHER WEIGH IDLER NUMBERS REMOVED WTS252 LABEL

UNLESS OTHERWISE STATED UNTOLERANCED DIMENSIONS TO BE WITHIN THE LIMITS SHOWN

NOMINAL SIZE	UP TO 50	ABOVE 50 UP TO 150	ABOVE 150 UP TO 300	ABOVE 300 UP TO 1000	ABOVE 1000
MACHINING	± 0.1	± 0.2	± 0.3	± 0.5	± 1.0
FABRICATION	± 0.5	± 0.5	± 0.5	± 1.0	± 2.0
ASSEMBLIES	± 0.5	± 0.5	± 0.5	± 1.0	± 2.0

DRAWN	B.ROBINSON
CHECKED	
APPROVED	
DATE APP'D	
SCALE	N.T.S

DO NOT SCALE
IF IN DOUBT
ASK

WEB-TECH AUSTRALIA PTY. LTD.
A.C.N. 010 764 431
11 ELECTRONICS STREET EIGHT MILE PLAINS, QUEENSLAND, 4113, AUSTRALIA
P.O. BOX 4008 EIGHT MILE PLAINS, QUEENSLAND, 4113, AUSTRALIA
Phone +61-7-3841 2844 Fax +61-7-3841 0005

TITLE
CONVEYOR STIFFENING

ALL DIMENSIONS IN MILLIMETRES
UNLESS OTHERWISE SPECIFIED

This drawing and any information or description matter set out herein are the confidential and copyright property of WEB-TECH AUSTRALIA PTY. LTD. and must not be disclosed, loaned, copied or used for manufacturing / tendering or for any other purpose without their written permission.

SIZE	DRAWING No.	
A1	NUMBER BSSG04	REV. B
	CUSTOMER	
	PROJECT	
	CAD FILE BSSG04 - Conveyor Stiffening	

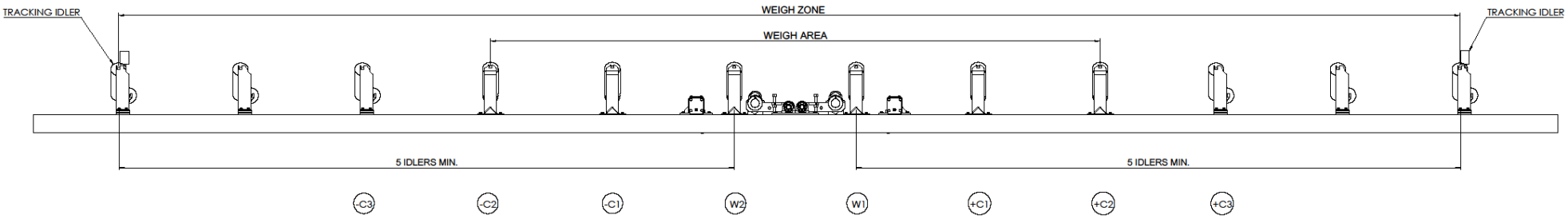

IT IS PREFERABLE NOT TO LOCATE TRACKING IDLERS WITHIN THE WEIGHFRAME AREA. TRACKING IDLERS SHOULD BE NOT CLOSER THAN 5 IDLER SPACINGS FROM THE WEIGHFRAME.

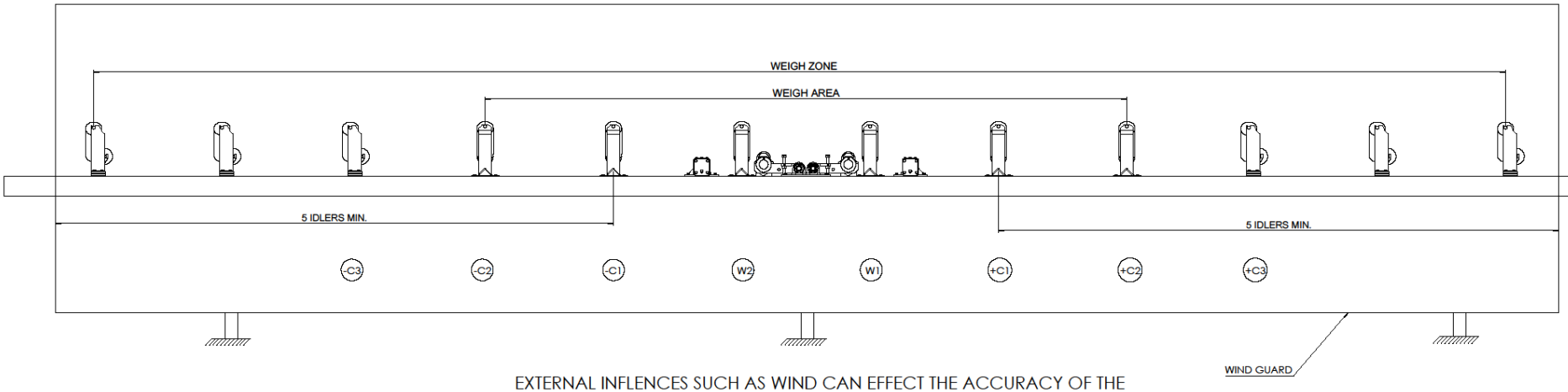

EXTERNAL INFLENCES SUCH AS WIND CAN EFFECT THE ACCURACY OF THE BELT SCALE. WIND GUARDS SHOULD BE INSTALLED FOR AT LEAST 5 IDLERS EITHER SIDE OF THE WEIGHFRAME WHERE NECESSARY.

REVISIONS

A: 30/06/16 B.ROBINSON ISSUED FOR APPROVAL

A: 22/07/16 B.ROBINSON ADDED TRACKING IDLER AND WIND GUARD LABELS CHANGED DIM POSITION

UNLESS OTHERWISE STATED UNTOLERANCED DIMENSIONS TO BE WITHIN THE LIMITS SHOWN

NOMINAL SIZE	UP TO 50	ABOVE 50 UP TO 150	ABOVE 150 UP TO 300	ABOVE 300 UP TO 1000	ABOVE 1000
MACHINING	± 0.1	± 0.2	± 0.3	± 0.5	± 1.0
FABRICATION	± 0.5	± 0.5	± 0.5	± 1.0	± 2.0
ASSEMBLIES	± 0.5	± 0.5	± 0.5	± 1.0	± 2.0

DRAWN	B.ROBINSON
CHECKED	
APPROVED	
DATE APP'D	
SCALE	N.T.S

DO NOT SCALE IF IN DOUBT ASK

WEB-TECH AUSTRALIA PTY. LTD.
A.C.N. 010 704 431
11 ELECTRONICS STREET EIGHT MILE PLAINS, QUEENSLAND, 4113, AUSTRALIA
P.O. BOX 4004 EIGHT MILE PLAINS, QUEENSLAND, 4113, AUSTRALIA
Phone +61-7-3841 2044 Fax +61-7-3841 0005

TITLE

TRACKING IDLERS AND WIND GUARDS

ALL DIMENSIONS IN MILLIMETRES UNLESS OTHERWISE SPECIFIED

This drawing and any information or descriptive matter set out hereon are the confidential and copyright property of WEB-TECH AUSTRALIA PTY. LTD. and must not be disclosed, loaned, copied or used for manufacturing / tendering or for any other purpose without their written permission.

SIZE	DRAWING No.	
A1	NUMBER: BSSG05	REV. B

CUSTOMER

PROJECT

CAD FILE: BSSG05B - Training Idlers and wind Guards

MW6 DATA SHEET			
Customer:		Conveyor Designation:	
Model:		Date:	
Load Cell Cap/Type:		Data by:	
Tare:	Serial No:	Material:	
Contract No.		Order No:	
Software version No:		Board S/N:	
Tacho:	Ppr. Type:	Multiplier :	

Menu	MASTERWEIGH 6 DATA					
1	Parameter Setup				Pulse Width:	ms
	Capacity	Inc	Zero ref:	mV	Precision ref:	mV
2	Pulses:		Per Belt Rev.		No. of Belt Revs:	
3	Zero Calibration:			mV.	Z Track:	mV.
4	Fixed Weight Calibration		Calibration Weights :			
	Span:	Target Weight:			From Chains or Live Load Test	
5	Empirical Span:					
6	Null Level:		This value should be no more than 1 to 2% of design capacity.			
7	Autozero Tracking					
	Zero Track if <		For	Revs.	Delay Time:	secs
8	Load Cell Output					
	Static (No Load):		mV.	Static (with Weights):		mV.
	Dynamic (No Load):		mV.	Dynamic (with Weights):		mV.
9	Tacho Frequency:		Hz.	@ Motor frequency =		Hz.
10	Filter Factors					
	Display:	secs.	Rate O/P:	secs.	Tacho I/P :	secs.
	Fast Track Band:	%.				
11	Displayed Units:	Kgs / Hr		Belt Serial Number :		
12	Belt Speed:	m /s	@ Motor freq. =	Hz.	Belt Length :	m
	Resets =	Cleared to 1.		Configures =	Cleared to 1.	

WEB-TECH WEIGHFEEDER DESIGN DATA SHEET

CLIENT : _____ **DATE :** _____

DESIGNATION : _____ **MODEL :** _____

CALIBRATION METHOD : _____

CALIBRATION BAR(S)

1. CALIBRATION BAR QTY AND TOTAL WEIGHT _____ = _____ **kg**
2. IDLER PITCH _____
3. TOTAL WEIGH AREA _____ **metres**
4. EQUIVALENT LOADING/m WITH CAL BAR(S) (Item 1 / Item 3) = _____ **kg/m**
5. BELT SPEED _____ **m/s**
6. SIMULATED MASS RATE (Item 4 x Item 5 x 60) = _____ **kg/min**
7. BELT LENGTH _____ **metres**
8. No. OF BELT REVOLUTIONS FOR TEST _____
9. **TARGET WEIGHT (Item 4 x Item 7 x Item 8) =** _____
10. **TARGET WEIGHT after material tests =** _____

CALIBRATION CHAIN

1. WEIGHT OF CALIBRATION CHAIN PER STRAND _____ **kg/m**
2. No. OF STRANDS _____
3. TOTAL WEIGHT OF CALIBRATION CHAIN (Item 1 x Item 2) _____ **kg/m**
4. BELT LENGTH _____ **m**
5. No. OF BELT REVOLUTIONS FOR TEST _____
6. **TARGET WEIGHT (Item 3 x Item 4 x Item 5) =** _____
7. **TARGET WEIGHT after material tests =** _____

SETTINGS

1. SHEARGATE OPENING (@ CENTRE) _____ mm
2. MIN. FREQUENCY ON VVVF DRIVE _____ Hz
2. MAX. FREQUENCY ON VVVF DRIVE _____ Hz